XTC-100/101/102

SERVICE MANUAL

US Model
Canadian Model
E Model
XTC-100
AEP Model
XTC-100/101
Germany Model
XTC-102

Photo: XTC-100

SPECIFICATIONS

Power amplifier section

Outputs	Speaker outputs (sure seal connectors)
Speaker impedance	4 – 8 ohms
Maximum power output	35 W × 4 (at 4 ohms)

Tuner section

FM

Tuning range	87.5 – 108.0 MHz
Antenna terminal	External antenna connector
Intermediate frequency	10.7 MHz
Usable sensitivity	12 dBf (75 ohms)
Selectivity	75 dB at 400 kHz
Signal-to-noise ratio	65 dB (stereo), 70 dB (mono)
Harmonic distortion at 1 kHz	0.5% (stereo), 0.3% (mono)
Separation	35 dB at 1 kHz
Frequency response	30 – 15,000 Hz
Capture ratio	2 dB

AM (MW/LW)

Tuning range	XTC-100: European and other countries 531 – 1,602 kHz (at 9 kHz step) North and South American countries 530 – 1,620 kHz (at 10 kHz step) AM tuning interval 9 kHz/10 kHz switchable (except the model for European countries) XTC-101: MW 531 – 1,602 kHz LW 153 – 281 kHz XTC-102: 531 – 1,602 kHz
Antenna terminal	External antenna connector
Intermediate frequency	450 kHz
Sensitivity	XTC-100/102: 35μV XTC-101: MW 35μV LW 70μV

General

Time display system	12 hour display
Output lead	Power antenna relay control lead Power amplifier control lead
Input	WM IN jack
Tone controls	Bass ±10 dB at 100 Hz Treble ±10 dB at 10 kHz
Loudness	+10 dB at 100 Hz +6 dB at 10 kHz
Power requirements	12 V DC car battery (negative ground)
Dimensions	Approx. 178 × 50 × 135 mm (w/h/d) not incl. projecting parts and controls
Weight	Approx. 1.9 kg
Accessories supplied	Connecting cord (1) Rubber cap for the WM IN jack (1) Front detachable panel carrying case (1) Mounting hardware (1 set)

Design and specifications subject to change without notice.

使用時は添付資料も参照のこと
Refer to the additional documents.

CHANGER CONTROL RECEIVER

SONY®

TABLE OF CONTENTS

Section	Title	Page
Specifications		1
1.	**GENERAL**	
	Location and Function of Controls	3
	Setting the Clock	4
	CD Operation	4
	Radio Reception	5
	WALKMAN Connection	6
	Installation	7
	Connections	9
2.	**ADJUSTMENTS**	11
3.	**DIAGRAMS**	
3-1.	IC501 (μPD75516GF-2483B9), IC801 (μPD6125AG-729) Functional Description	14
3-2.	Block Diagram	17
3-3.	Schematic Diagram	21
3-4.	Printed Wiring Boards – Main Section –	24
3-5.	Printed Wiring Boards – Display, Power Section –	29
4.	**EXPLODED VIEWS**	37
5.	**ELECTRICAL PARTS LIST**	39

SAFETY-RELATED COMPONENT WARNING!!

COMPONENTS IDENTIFIED BY MARK ⚠ OR DOTTED LINE WITH MARK ⚠ ON THE SCHEMATIC DIAGRAMS AND IN THE PARTS LIST ARE CRITICAL TO SAFE OPERATION. REPLACE THESE COMPONENTS WITH SONY PARTS WHOSE PART NUMBERS APPEAR AS SHOWN IN THIS MANUAL OR IN SUPPLEMENTS PUBLISHED BY SONY.

ATTENTION AU COMPOSANT AYANT RAPPORT À LA SÉCURITÉ!

LES COMPOSANTS IDENTIFIÉS PAR UNE MARQUE ⚠ SUR LES DIAGRAMMES SCHÉMATIQUES ET LA LISTE DES PIÈCES SONT CRITIQUES POUR LA SÉCURITÉ DE FONCTIONNEMENT. NE REMPLACER CES COMPOSANTS QUE PAR DES PIÈCES SONY DONT LES NUMÉROS SONT DONNÉS DANS CE MANUEL OU DANS LES SUPPLÉMENTS PUBLIÉS PAR SONY.

This section is extracted from instruction manual.

SECTION 1
GENERAL

Location and Function of Controls

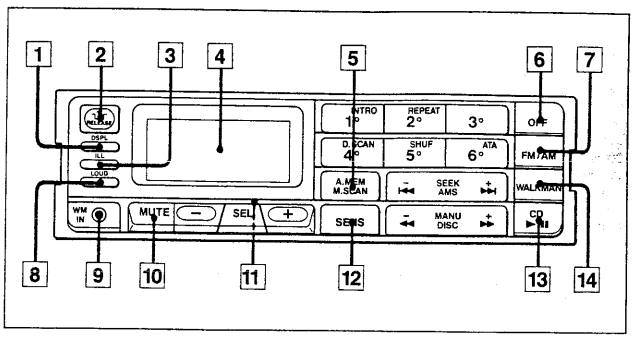

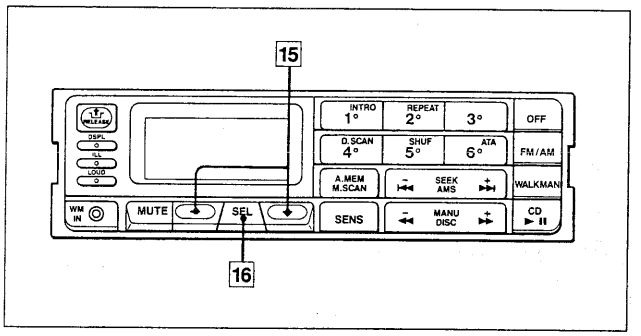

Refer to the pages in ● for details.

1 **DSPL (display) button** ⓭ ⓮

2 **RELEASE button** ⓲

3 **ILL (illumination color change) button** ⓲
Press to change the color of illumination. Two colors, green and amber, are available.

4 **Display window**

5 **A.MEM (automatic memory)** ⓯**/M.SCAN (memory scan) button** ⓱

6 **OFF (power off) button**

7 **FM/AM (radio on/band select) button (XTC-100)** ⓭
FM/MW/LW (radio on/band select) button (XTC-101) ⓭

8 **LOUD (loudness) button**
Press to reinforce bass and treble especially when listening at low volume. To disengage the button, press it again.

9 **WM IN (WALKMAN input) jack** ⓰

10 **MUTE button (XTC-100/101)**
Press to momentarily mute the sound. Press again to restore the same level as before.

SDK button (XTC-102)

11 **Reset button (located on the front side of the unit hidden by the front detachable panel)**
Press this button when you use this unit for the first time and when you have changed the car battery, or when other buttons do not function.

12 **SENS (sensitivity) button** ⓫

13 **CD►II(disc play/pause) button** ⓳

14 **WALKMAN button** ⓳

15 **⊖ ⊕ (volume/bass/treble/balance/fader control) button**
⊖ ⊕ button normally functions as the volume control.
Adjust the level within three seconds after selecting the desired control mode by SEL button, otherwise, the mode goes back to the volume control mode.

16 **SEL (control mode select) button**
Press to select the desired mode, BAS (bass), TRE (treble), BAL (balance), FAD (fader), or VOL (volume).

Display window	Control mode	⊖ SEL ⊕	
		Press ⊖	Press ⊕
BAS	Bass control	For less bass	For more bass
TRE	Treble control	For less treble	For more treble
BAL	Balance control	To decrease the right-speaker volume	To decrease the left-speaker volume
FAD	Fader control	To decrease the rear-speaker volume	To decrease the front-speaker volume
VOL	Volume control	For less volume	For more volume

Location and Function of Controls

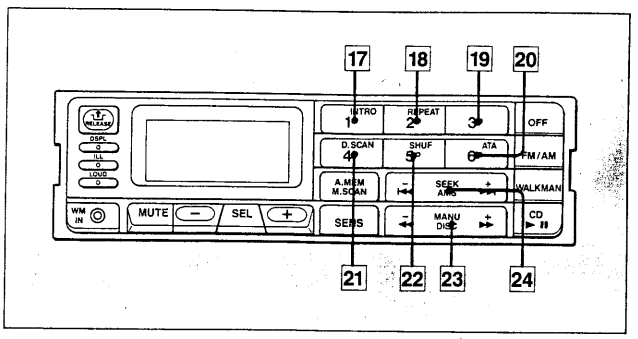

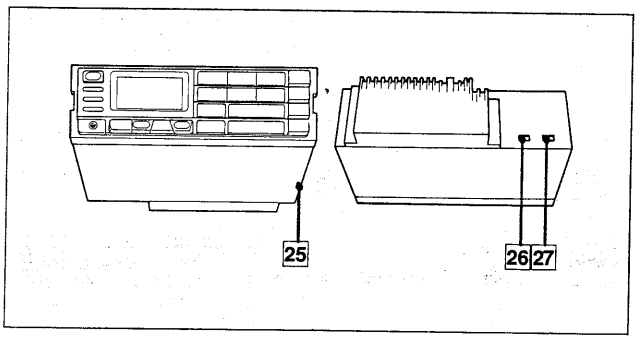

	During disc play	During radio reception
17	INTRO button ⓬	Preset number buttons ⓱
18	REPEAT button ⓬	
19	—	
20	ATA (automatic tuner activation) button ⓬	
21	D.SCAN (disc scan) button ⓬	
22	SHUF (shuffle) button ⓬	
23	DISC (disc change/manual search) button ⓯ ⓫	MANU (manual tuning) button ⓯
24	AMS* button ⓫	SEEK (automatic tuning) button ⓭

* Automatic Music Sensor

Note: Mute function, intro-play, repeat play, disc scan, and shuffle play (1 and 2) will be canceled when you press the OFF button or when you keep the ignition key set to the off position for more than eight seconds. The automatic tuner activation will be maintained until you press each button again.

25 **POWER SELECT switch**
See "Note on the Power Select Switch" in the Installation/Connections manual.

26 **AM TUNING INTERVAL SELECT switch (XTC-100/101 ONLY) (except the model for European countries)**
See "Note on the AM Tuning Interval Select Switch" in the Installation/Connections manual.

27 **SPEAKER SELECT switch**
See "Note on the Speaker Select Switch" in the Installation/Connections manual.

Location and Function of Controls

How to Detach and Attach the Front Detachable Panel

To detach
Depress the button to pop up the panel, then pull it out.
Use the supplied carrying case to store it.

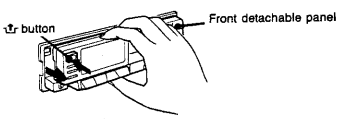

To attach
Align the part Ⓐ and Ⓑ, and push the panel until it is locked.

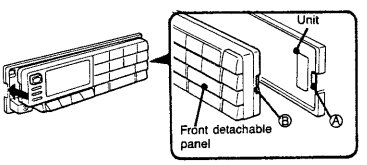

Setting the Clock

Turn the ignition key to the ON position before setting the clock.

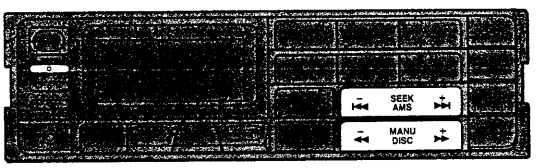

Example: To set to 3:50

1 DSPL — **Press DSPL more than 2 seconds.**
12:00
The clock display appears and the digits begin to blink.

2 SEEK AMS — **Press to set the hour digit**
3:50
and
MANU DISC — **Press to set the minute digit**

3 DSPL — **Press DSPL.**
The clock begins to operate.

Note
When you use the unit with the POWER SELECT switch set to OFF, turn on the unit first, then set the clock following the procedures above. If the unit is not turned on, you cannot set the clock.

CD operation

Disc Playing (When the optional Sony CD changer is connected)

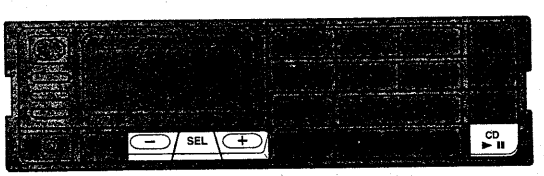

Before operating, insert a disc magazine with discs into the CD changer.

1 CD — **Press to start the disc play.**

2 SEL — **Press to adjust the volume.**

Other Operations

To pause during play	CD
To start again	CD
To listen to another disc in the disc magazine	MANU DISC — Press lightly. If you press it for more than 0.5 seconds, it operates as the manual search.

To stop disc play and ...

To listen to the radio	FM/AM (XTC-100)	FM/MW/LW (XTC-101)
To turn off the unit	OFF	

To display the elapsed time or the clock time during disc playing
Press DSPL.
Each press on the button changes mode cyclically as follows:

Elapsed time → Clock time → Normal

Locating the Beginning of a Desired Selection during Disc Playing (AMS function)

To locate the beginning of the selection being played	Press SEEK AMS.
To locate a previous selection	Keep SEEK AMS pressed. Release the button at the desired selection.
To locate the next selection	Press SEEK AMS.
To locate a selection ahead	Keep SEEK AMS pressed. Release the button at the desired selection.

When the first selection or the last selection of the disc is located, the play begins from the selection.

To Search for a Particular Point in a Selection (Manual search)

To go ahead at high speed	Keep MANU DISC pressed. Release the button at the desired point.
To go back at high speed	Keep MANU DISC pressed. Release the button at the desired point.

The elapsed time of the selection is displayed during the manual search.

Disc Playing

Various Plays

To listen to the beginnings of the selections in order (Intro-play)*

Press [INTRO 1°]. The first ten seconds of each selection on every disc will be played in sequence from the next selection.

To repeat the selection being played (Repeat play)

Press [REPEAT 2°]. The unit goes back to the beginning of the selection when the selection ends.

To search for the desired disc (Disc scan)

Press [D.SCAN 4°]. The first ten seconds of the first selection on each disc will be played in sequence.

To play the selection on the disc in random order (Shuffle play 1)*

Press [SHUF 5°] lightly. All selections on a disc being played will be played in random order. After playing all selections on the disc, the unit goes to the next disc.

To play the selection on all discs in random order (Shuffle play 2)*

Press [SHUF 5°] for more than two seconds. All selections on all discs in the disc magazine will be played in random order.

To turn on the radio automatically while changing discs (ATA function)

Press [ATA 6°]. The radio is heard automatically while changing discs. Press DSPL to display the frequency indication while the ATA is operating. In this case, all the tuner operation buttons function in the same way as when you turn on the tuner (except for the FM/AM or FM/MW/LW button).

To resume normal playback
Press each button again.

*When you press the INTRO during the shuffle play (1 or 2), the first ten seconds of all selections will be played in random order.

Radio reception

Automatic Tuning

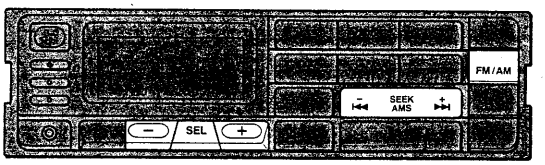

1 [FM/AM] XTC-100 [FM/MW/LW] XTC-101

Press to select the desired band, FM1, FM2, FM3 or AM (MW, LW).

The tuner turns on at the same time.

2 [SEEK AMS]

Press to start scanning.

[SEEK AMS] For lower frequencies

[SEEK AMS] For higher frequencies

The scanning automatically stops when a station is tuned in.

Repeat this step until the desired station is tuned in.

3 [SEL]

Press to adjust the volume.

FM has three bands (FM1, FM2, FM3). Three bands cover the same frequency range. To change the band, press [FM/AM] ([FM/MW/LW]).

Automatic Tuning

Other Operations

To stop the radio and turn off the unit	[OFF]	**To stop the radio and listen to a disc**	[CD ► II]

When there are too many stations and the scanning stops too frequently during automatic tuning

Press [SENS]*. Only the stations with relatively strong signals can be tuned in.

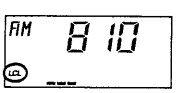

When the FM stereo progam is too weak and noisy

Press [SENS]*. The noise will be reduced. The sound will be monaural instead.

*Each press on the button changes the mode cyclically as LCL (local) ⇨ MONO ⇨ normal ... .

When the FM stereo program of sufficient signal strength is tuned in

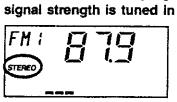

The program is automatically received in stereo.

To display the time indication during radio reception
Press DSPL.
To restore the frequency indication, press it again.

Radio reception

Manual Tuning

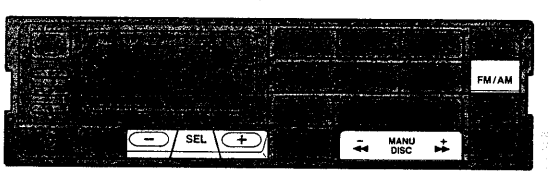

1 [FM/AM] XTC-100 [FM/MW/LW] XTC-101

Press to select the desired band, FM1, FM2, FM3 or AM (MW, LW).

The tuner turns on at the same time.

2 [MANU DISC]

Press to select the desired station.

[MANU DISC] For lower frequencies

[MANU DISC] For higher frequencies

To change the frequency rapidly, keep the button pressed.

3 [SEL]

Press to adjust the volume.

Warning
While driving, keep your eyes on the road and use the automatic tuning or the memory preset tuning!

Radio reception

Memory Preset Tuning

You can memorize a total of 24 stations, one on each preset number. XTC-100: 6 stations for each band / XTC-101: 6 stations for each FM band and 6 stations in total for MW and LW band.

Memorizing the Stations Automatically (Automatic memory function)

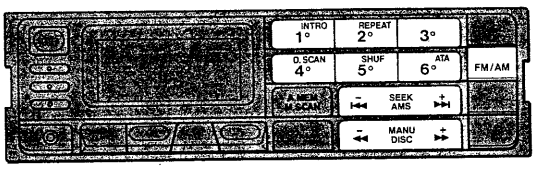

1 FM/AM (XTC-100) FM/MW/LW (XTC-101)

Press to select the desired band, FM1, FM2, FM3 or AM (MW, LW).

The tuner turns on at the same time.

2 A.MEM M.SCAN

Press for more than two seconds.

The unit starts scanning the selected band and memorizes the tuned stations on the preset number button 1 through 6 automatically.

In what way are stations scanned and memorized?

The unit scans the selected band twice. The scanning starts from the displayed frequency. During first cycle, the unit scans stations with considerably strong signals. During the next cycle, the unit scans all stations that can be received, including weak ones. And for memorizing, if any preset number is indicated in the display window, memorizing starts from this preset number. When you choose FM2 and the preset number 3 is displayed in the window, for example, memorizing starts from the preset number 3 on FM2, and stops at the preset number 6 on FM3.

Surveying What is Being Broadcasted on the Preset Stations

Press A.MEM M.SCAN lightly.

Each memorized station will be scanned for five seconds in order. (When the broadcast of the memorized stations is too weak, it cannot be received.)

To keep listening to a station during the memory scanning, press M.SCAN when the desired station is tuned in.

Note

Be sure to press it lightly. If you keep it pressed for more than two seconds, the Automatic Memory Function (A. MEM) will be activated and new stations will be memorized on the preset buttons.

Memorizing Only the Desired Stations Manually

Example: To memorize on the preset number 1

1 FM/AM (XTC-100) FM/MW/LW (XTC-101)

Press to select the desired band.

2 SEEK AMS or MANU DISC

Press to tune in the desired station.

3 INTRO 1°

Press for more than two seconds.

The number of the pressed preset number button will be displayed. MEM indicator appears to show that the station has been memorized. (MEM indicator will disappear in a few seconds.)

Repeat these steps for each preset button.

Important

Every preset number button has only one memory for a band. The previously memoried station will be erased when you enter a new station of the same band on the same preset number button.

Memory Preset Tuning

To Receive the Preset Station

1 FM/AM (XTC-100) FM/MW/LW (XTC-101)

Press to select the desired band.

2 INTRO 1° — ATA 6°

Press lightly to receive the desired station.

WALKMAN connection

Listening to a WALKMAN

To the WM IN jack, you can connect various sources equipped with headphones jack, such as a WALKMAN.

1

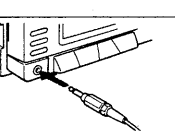

Connect the supplied connecting cord to WM IN jack.

2 WALKMAN

Press the WALKMAN button.

AUX

"AUX" appears on the display window.

3 SEL

Start playing WALKMAN.
Press to adjust the volume.

Other Operations

To listen to the radio	FM/AM (XTC-100) FM/MW/LW (XTC-101)
To listen to a disc	CD ►II
To turn off the unit	OFF

Do not forget to stop playing the WALKMAN when making other operations.

Cautions

- Place the WALKMAN where it would not interfere with normal driving function of a car.
- Do not leave the WALKMAN in a location near heat source, in a place subject to direct sunlight, or especially not on the dashboard of a car.

Notes

- Press the WALKMAN button after connecting the cord. When the cord is not connected to the unit, the WALKMAN button does not function. ("AUX" does not appear even if you press it.)
- Make sure that the DBB (Dynamic Bass Boost) switch on the WALKMAN is switched off and set the volume control on the WALKMAN side so as not to distort the sound.
- **When the WALKMAN is not connected to the unit, cover the WM IN jack with the supplied rubber cap.**

Installation/Installation/Instalación/Montage/ 安装

Precautions
- Choose the mounting location carefully so that the unit will not interfere with the normal driving funcions of the driver.
- Avoid installing the unit where it would be subject to high temperatures, such as from direct sunlight or from the heater, or where it would be subject to dust, dirt, or excessive vibration.
- Do not expose the front detachable panel to direct sunlight, heat sources such as hot air ducts or leave it in a humid places. Never leave it on the dashboard etc. of car parked in direct sunlight where there may be a considerable rise in temperature.
- Use only the supplied mounting hardware for a safe and secure installation.

Précautions
- Choisir soigneusement l'emplacement de sorte que l'appareil ne gêne pas la conduite.
- Eviter d'installer l'appareil là où il serait soumis à de hautes températures, telles que celles du rayonnement solaire direct ou de l'air chaud du chauffage, là où il serait exposé à la saleté, à la poussière excessive ou à de violentes vibrations.
- Ne pas exposer le panneau avant détachable au rayonnement solaire direct, à des sources de chaleur telles que des bouches d'air chaud ou le laisser dans un endroit humide. Ne jamais le laisser sur le tableau de bord, etc. d'une voiture garée en plein soleil où la température risque d'augmenter considérablement.
- Pour une installation sûre installation sûre, n'utiliser que le matériel de montage fourni.

Precauciones
- Elija cuidadosamente el lugar de montaje de forma que la unidad no intèrfiera en las funciones normales de conducción.
- Evite instalar la unidad donde pueda quedar sometida a temperaturas elevadas, como a la luz solar directa o cerca del sistema de calefacción, o al polvo, la suciedad, o vibraciones excesivas.
- No exponga el panel frontal desmontable a la luz solar directa ni a fuentes térmicas tales como conductos de aire cálido, ni la deje en lugares húmedos. No la deje nunca sobre el salpicadero, etc. de un automóvil aparcado al sol, ya que la temperatura podría aumentar considerablemente.
- Para realizar una instalación segura y firme, emplee solamente la ferretería de montaje suministrada.

Voorzorgsmaatregelen
- Installeer het apparaat niet op een plaats waar het u bij besturing van de auto zou kunnen hinderen.
- Installeer het apparaat niet op plaatsen waar het blootgesteld wordt aan hoge temperaturen zoals van direkt zonlicht of de warme luchtstroom van de auto-verwarming, aan sterke trillingen, of waar het in kontakt komt met veel stof of vuil.
- Stel het demonteerbare voorpaneel niet bloot aan direkt zonlicht of een andere warmtebron zoals een auto-verwarming, en laat dit ook niet op een vochtige plaats achter. Laat het voorpaneel nooit op het dashboard e.d. liggen, of in een geparkeerde auto in de volle zon, aangezien hierin de temperatuur enorm hoog kan oplopen.
- Gebruik voor het veilig en stevig monteren van het apparaat uitsluitend de bijgeleverde montage-onderdelen.

事前注意事项
- 仔细选择安装场所，不要妨碍正常驾驶。
- 安装场所因避免受到高温，如阳光直接照射或附近有电热器的地方，及多尘或振动过大的地方。
- 装置的可拆卸的前表板，不可放在直接照射到太阳或如热气管等热源附近以及潮湿的地方。故不应放在驻车于阳光下车辆内的驾驶仪表板上面等处，因为车内的温度可能上升得很高。
- 安装时仅使用附属的工具及部件，以确保安装牢靠及安全。

Mounting Example

Installation in the dashboard

Exemple de montage

Installation sur le tableau de bord.

Ejemplo de montaje

Instalación en el salpicadero

Montagevoorbeeld

Montage in het dashboard

安装范例

安装在仪表盘上

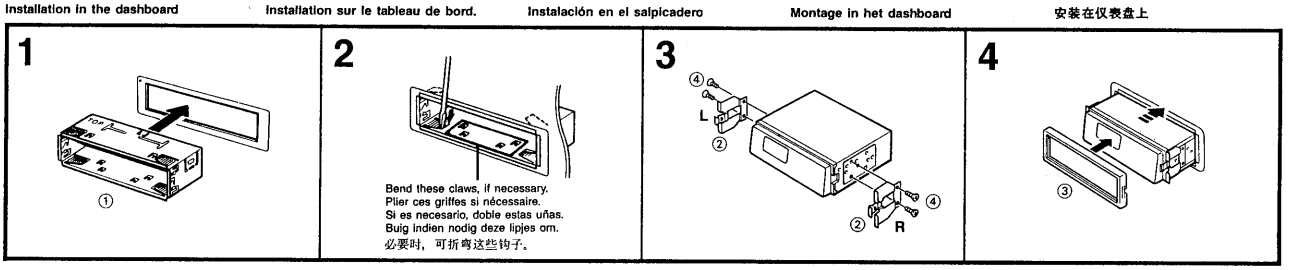

To support the unit

Pour supporter l'appareil

Sujeción de la unidad

Ondersteunen van het apparaat

支持装置

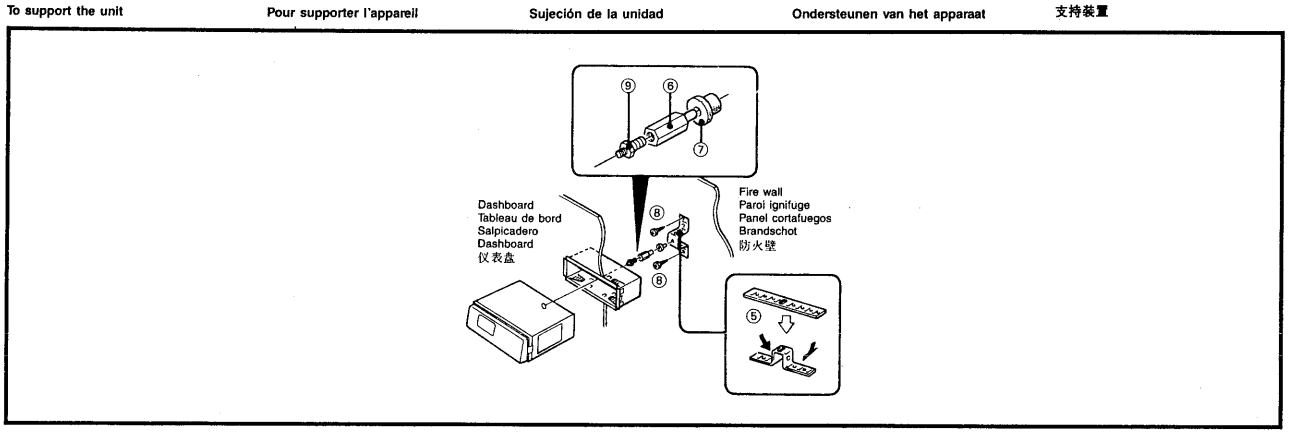

How to Detach and Attach the Front Detachable Panel

To detach
Depress the button to pop up the panel, then pull it out.
Use the supplied carrying case to store it.

Comment enlever et fixer le panneau avant amovible

Enlever
Appuyer sur le bouton pour détacher le panneau, puis le retirer.
Utiliser la coffret fournie pour le ranger.

Forma de extraer e instalar el panel frontal desmontable

Para extraerlo
Presione la tecla para desenganchar el panel, y después tire de él.
Emplee caja de transporte suministrada para guardarlo.

Verwijderen en bevestigen van het demonteerbare voorpaneel

Verwijderen
Druk de toets in om het voorpaneel naar voren te springen en trek dit vervolgens naar buiten.
Gebruik het bijgeleverde draagtetui om het voorpaneel in op te bergen.

如何装上及卸下前面板

卸下
按键以弹出面板，然后把其拉出。可把其装入附属的携带盒内。

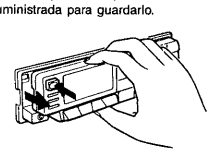

To attach
Align the part Ⓐ and Ⓑ, and push the panel until it is locked.

Fixer
Mettre les parties Ⓐ et Ⓑ face à face et appuyer sur le panneau pour le bloquer.

Para instalarlo
Alinee las partes Ⓐ y Ⓑ y empuje el panel hasta que quede enganchado.

Bevestigen
Breng de delen Ⓐ en Ⓑ op één lijn en druk het voorpaneel aan totdat dit vastklikt.

装上
把 Ⓐ Ⓑ 两处对齐，把其推入。

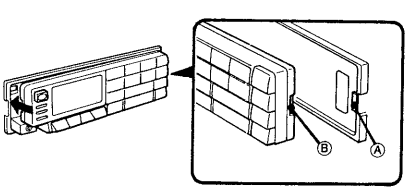

System Connection
Connexions
Instalación
Montage
系统连接

Example 1 Set the speaker select switch to NORMAL SP position.
Exemple 1 Mettre le sélecteur de haut-parleur sur la position NORMAL SP.
Ejemplo 1 Ponga el selector de altavoces en la posición NORMAL SP.
Voorbeeld 1 Zet de luidspreker-keuzeschakelaar op "NORMAL SP".
例1 把扬声器选择开关定为 NORMAL SP 位置。

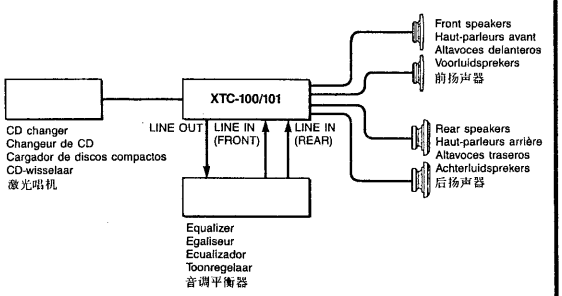

Example 2 Set the speaker select switch to FRONT 4 SP position.
Exemple 2 Mettre le sélecteur de haut-parleur sur la position FRONT 4 SP.
Ejemplo 2 Ponga el selector de altavoces en la posición FRONT 4 SP.
Voorbeeld 2 Zet de luidspreker-keuzeschakelaar op "FRONT 4 SP".
例2 把扬声器选择开关置 FRONT 4SP 位置

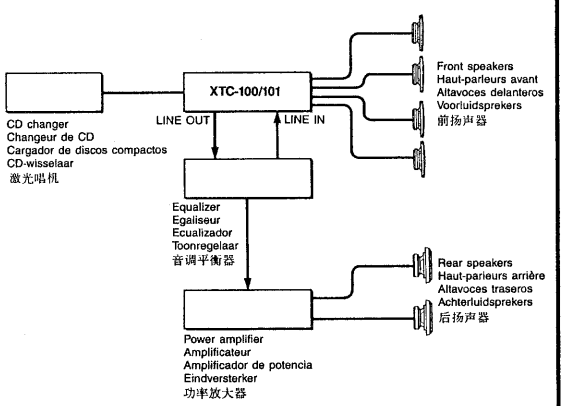

Example 3 Set the speaker select switch to NORMAL SP position.
Exemple 3 Mettre le sélecteur de haut-parleur sur la position NORMAL SP.
Ejemplo 3 Ponga el selector de altavoces en la posición NORMAL SP.
Voorbeeld 3 Zet de luidspreker-keuzeschakelaar op "NORMAL SP".
例3 把扬声器选择开关置 NORMAL SP 位置。

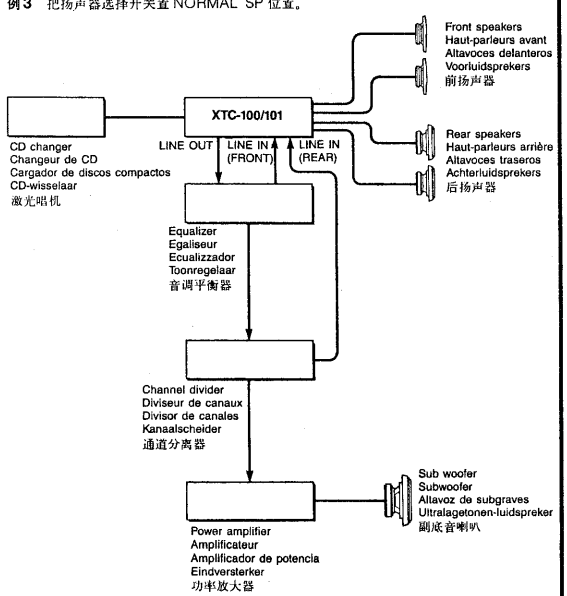

Supplied Mounting Hardware
Matériel de montage fourni
Ferretería de montaje suministrada
Bijgeleverde montage-onderdelen
附属的安装五金

The numbers in the list are keyed to those in the instructions.
Les numéros de la liste sont en accord avec celles du mode d'emploi.
Los números de las ilustraciones siguientes corresponden a los de las instrucciones.
De nummers in de afbeelding verwijzen naar die in de montage-aanwijzingen.
下图中各部件之编号，将在下述解说文中引用。

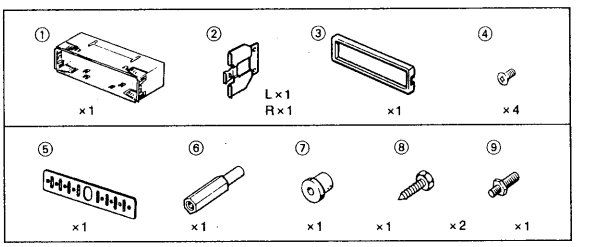

Connections/Connexions/Conexiones/Aansluitingen/ 连接

Caution
- This unit is designed for negative ground 12 V DC operation only.
- Before making connections, disconnect the ground terminal of the car battery to avoid short circuits.
- Connect the **red** power input lead only after all other leads are connected. And be sure to connect it to the positive 12 V power terminal which is energized when the ignition key is set to the accessory position.
- **Run all ground wires to a common ground point.**

Attention
- Cet appareil est conçu pour ne fonctionner que sur courant continu de 12 V avec masse négative.
- Avant d'effectuer les raccordements, débrancher la borne de masse de batterie de la voiture pour éviter tout court-circuit.
- Brancher le fil d'alimentation **rouge** après la cconnexion de tous les autres cordons. Veiller aussi à le raccorder à borne d'alimentation en courant continu de 12 V qui est énergétisée quand la clé est sur la position accessoire.
- **Acheminer tous les cordons à une masse commune.**

Precauciones
- Esta unidad ha sido diseñada para alimentarse solamente con una batería de automóvil de 12 V y negativo a masa.
- Antes de realizar las conexiones, desconecte el terminal de puesta a masa de la batería del automóvil a fin de evitar cortocircuitos.
- Conecte el conducto de entrada de alimentación **rojo** solamente después de haber conectado los demás conductores. Además, cerciórese de conectarlo a un terminal de 12 V positivo que se energice al poner la llave de encendido en la posición para accesorios.
- **Conecte todos los conductores de puesta a masa a un punto común.**

Let op!
- Dit apparaat is ontworpen voor gebruik op gelijkstroom van een 12 Volts auto-accu, negatief geaard.
- Alvorens te beginnen met het maken van aansluitingen, dient de aardklem van de auto-accu te worden losgemaakt. Dit om kortsluiting te voorkomen.
- Sluit de **rode** stroomdraad pas aan nadat alle andere aansluitingen zijn gemaakt. Zorg ervoor dat deze stroomdraad op de positieve 12 V accu-aansluiting wordt aangesloten. De draad komt dan onder spanning te staan, wanneer de kontaktsleutel wordt omgedraaid.
- **Sluit alle aarddraden op een gemeenschappelijk aardpunt aan.**

注意
- 本机器只可使用负极接地的12V直流电源。
- 连接前，先断开汽车蓄电池的接地线。以避免连接不当而引起短路。
- 在所有其它导线都连接完后，才连接**红色**的电源线。把其连在 +12 V 电源端子上，直此电源端子仅在点火钥匙在附件"accessory"位置时才通电。
- **所有接地线应集中于一个接地点。**

Note on the Power Select Switch

The illumination on the front panel is factory-set to be turned on even when the unit is not being played. However, this setting may cause the car battery to run down when the unit is used in the car which has no accessory position. To avoid this when using the unit in such a car, **set the power select switch located on the bottom to OFF, then press the reset button.** You can make the illumination turned off when the unit is not being played.

Remarque au sujet du sélecteur d'alimentation électrique

L'éclairage du panneau avant est réglé en usine et reste allumé même si l'appareil n'est pas sous tension. Mais ce réglage peut provoquer l'usure de la batterie de la voiture, si l'appareil est utilisé dans une voiture ne possédant pas de position accessoire. Si tel est le cas, **il est recommandé de positionner le sélecteur d'alimentation électrique sur OFF. ppuis d'appuyer sur la touche de réinitialisation.**
Ainsi l'éclairage peut être arrêter lorsque l'appareil n'est pas utilisé.

Nota sobre el selector de alimentación

La iluminación del panel frontal ha sido ajustada para que se active incluso aunque la unidad no se encuentre en reproducción. Sin embargo, este ajuste puede hacer que se descarque la batería del automóvil si la unidad se emplea en un automóvil carente de posición para accesorioe. Para evitar esto cuando emplee la unidad en un automóvil de este tipo, **ponga el selector de alimentación del panel inferior en OFF, y después presione el botón de reposición.** De esta forma, la iluminación se desactivará cuando la unidad no se encuentre en reproducción.

Opmerking over de verlichtings-keuzeschakelaar

Het apparaat is in de fabriek zo ingesteld dat de verlichting van het voorpaneel altijd aan is, zelfs al is het apparaat zelf uitgeschakeld. Als het apparaat echter is gemonteerd in een auto waar het kontaktslot geen "ACC" stand heeft, kan dit leiden tot uitputting van de accu. Om dit te vermijden, **zet u de verlichtings-keuzeschakelaar aan de onderkant van het apparaat op "OFF", en vervolgens drukt u de RESET toets in.** Met de keuzeschakelaar in deze stand, zal de verlichting van het voorpaneel uit zijn zolang het apparaat niet is ingeschakeld.

有关电源选择开关的说明

在出厂时，前面板的照明设定为ON，无论机器是否使用。当您的汽车之点火钥匙插口处无附件(accessory)位置时，可能会大量消耗汽车蓄电池。这时，**可把机器底部的电源选择开关置于OFF，然后按一下重整键。**这样，当机器不用时，照明不会亮。

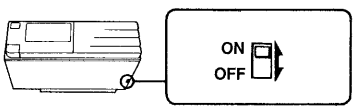

Change the position with a ball-point pen or similar objects.

Changer la position à l'aide d'un stylo à bille ou d'un objet similaire.

Cambie la posición con un bolígrafo u otro objeto similar.

Verander de stand van de keuzeschakelaar met behulp van een balpen of een vergelijkbaar voorwerp.

可用圆珠笔或类似用具来改变开关位置。

Note on the Speaker Select Switch

The outputs of the built-in amplifier can be set by the speaker select switch located at the rear of the unit.

Remarque au sujet du sélecteur de haut-parleur

Les sorties de l'amplificateur intégré peuvent être réglées sà l'aide du sélecteur de hautparleur situé à l'arrière de l'appareil.

Nota sobre el selector de altavoces

Las salidas del amplificador incorporado podrán ajustarse con el selector de altavoces situado en la parte posterior de la unidad.

Opmerking over de luidspreker-keuzeschakelaar

U kunt instellen op de uitgangssignalen van de ingebouwde eindversterker met de luidspreker-keuzeschakelaar, aan de achterzijde van het apparaat.

有关扬声器选择开关的备注

机内放大器的输出电平可用位于主机后部的扬声器选择开关设定。

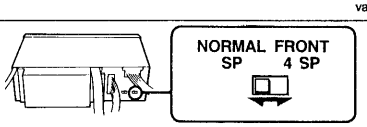

Change the position with a ball-point pen or similar objects.

Changer la position à l'aide d'un stylo à bille ou d'un objet similaire.

Cambie la posición con un bolígrafo u otro objeto similar.

Verander de stand van de keuzeschakelaar met behulp van een balpen of een vergelijkbaar voorwerp.

可用圆珠笔或类似用具来改变开关位置。

Position	Built-in amplifier outputs
NORMAL SP	Front 2 channels + Rear 2 channels
FRONT 4 SP	Front 4 channels

When you change the position of the speaker select switch, be sure to press the reset button after connecting the power input lead to the unit.

Position	Sorties de l'amplificateur intégré
NORMAL SP	Avant 2 canaux + Arrière 2 canaux
FRONT 4 SP	Avant 4 canaux

Lorsque la position du sélecteur de haut-parleur est modifiée, s'assurer d'appuyer sur la touche de réinitialisation après avoir raccordé le fil d'entrée d'alimentation électrique à l'appareil.

Posición	Salidas del amplificador incorporado
NORMAL SP	2 canales delanteros + 2 canales traseros
FRONT 4 SP	4 canales delanteros

Cuando cambie la posición del selector de canales, cerciórese de presionar el botón de reposición después de haber conectado el conductor de entrada de alimentación a la unidad.

Stand	Uitgangssignaal van de ingebouwde eindversterker
NORMAL SP	Voorluidsprekers (2 kanalen) + Achterluidsprekers (2 kanalen)
FRONT 4 SP	Voorluidsprekers (4 kanalen)

Vergeet niet op de terugsteltoets te drukken, nadat u de stand van de luidspreker-schakelaar heeft gewijzigd en het stroomdraad van het apparaat heeft aangesloten.

位置	机内放大器输出
NORMAL SP	前2通道+后2通道
FRONT 4 SP	前4通道

当你按选择开关变换喇叭位置时，请确认在接通电源之后首先按下复位按钮。

Note on the AM Tuning Interval Select Switch (except the model for European countries)

The AM tuning interval is factory-set to 9 kHz. If the frequency allocation system of your country is based on 10 kHz interval, set the selector on the rear to 10 K before making connections.

After changing position of the AM tuning interval select switch, be sure to press the reset button.

Remarque sur le sélecteur d'intervalle d'accord AM (sauf pour le modèle destiné à l'Europe)

L'intervalle d'accord AM a été réglé en usine sur 9 kHz. Si le système d'allocation de fréquence du pays d'utilisation est basé sur l'intervalle de 10 kHz, placer le sélecteur, situé sur le fond, sur la position "10 K" arrière d'effectuer les connexions.

Si la position de ce sélecteur a été modifiée, ne pas oublier d'appuyer sur la touche.

Nota sobre el selector de intervalo de sintonía de AM (excepto el modelo para Europa)

El intervalo de sintonía de AM ha sido ajustado en fábrica a 9 kHz. Si el sistema de asignación de frecuencias de su país se basa en el intervalo de 10 kHz, ponga el selector del panel posterior en 10 K antes de realizar las conexiones.

Después de haber cambiado la posición del selector de intervalo de sintonía de AM, cerciórese de presionar el botón de reposición.

Opmerking over de AM afsteminterval-keuzeschakelaar (Behalve voor het model voor Europa)

Het AM-afsteminterval is in de fabriek ingesteld op 9 kHz. Mocht echter de frekwentietoewijzing voor de AM in de regio waar u het apparaat gebruikt 10 kHz zijn, dan dient u de schakelaar aan de achterkant van het apparaat op "10K" te zetten alvorens enige aansluiting te maken.

Vergeet niet om de terugsteltoets in te drukken, nadat u de instelling voor het AM afsteminterval heeft gemaakt.

有关AM调谐单位间隔选择开关(不包括欧洲型机器)

出厂时，调谐间隔的单位为9 kHz。如果贵国的广播频率分布体制是以10 kHz为单位的。那么在线路连接前，请把机器后面的选择开关置於10 K位置。

重新设定了上述开关后，请务必不要忘了按一下重整(RESET)键。

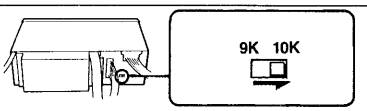

Change the position with a ball-point pen or similar objects.

Changer la position à l'aide d'un stylo à bille ou d'un objet similaire.

Cambie la posición con un bolígrafo u otro objeto similar.

Verander de stand van de keuzeschakelaar met behulp van een balpen of een vergelijkbaar voorwerp.

可用圆珠笔或类似用具来改变开关位置。

Speaker Connection / Connexions / Conexión de los altavoces / Aansluiten van de luidsprekers / 扬声器的连接

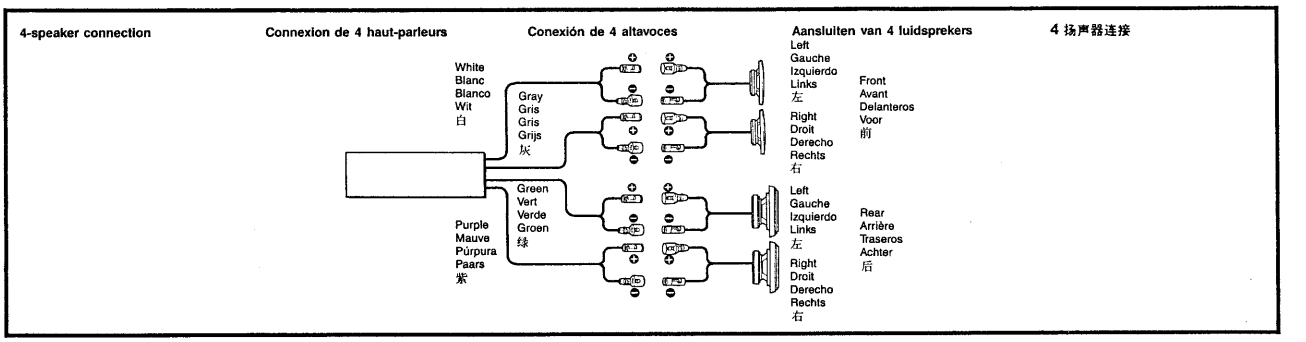

Notes on speaker connection
- Use speakers with an impedance of 4 to 8 ohms, and with adequate power handling capacities.
- Do not connect the terminals of the speaker system to the car chassis, and do not connect the terminals of the right speaker with those of the left speaker.
- Do not attempt to connect the speakers in parallel.

Remarques sur la connexion des haut-parleurs
- Utiliser des haut-parleurs d'une impédance de 4 à 8 ohms et d'une puissance adéquate.
- Ne pas relier les bornes de haut-parleurs au châssis de la voiture et ne pas raccorder les bornes du haut-parleur droit à celles du haut-parleur gauche.
- Ne pas raccorder les haut-parleurs en parallèle.

Notas sobre la conexión de los altavoces
- Emplee altavoces con una impedancia de 4 a 8 ohmios, y con la capacidad de manejo de potencia adecuada, ya que de lo contrario podría dañarlos.
- No conecte los terminales del sistema de altavoces al chasis del automóvil, ni los del altavoz derecho a los del izquierdo.
- No intente conectar los altavoces en paralelo.

Opmerkingen betreffende het aansluiten van de luidsprekers
- Gebruik luidsprekers met een impedantie van 4 tot 8 Ohm en let op dat die het vermogen van de versterker kunnen verwerken. Als dit wordt verzuimd, kunnen de luidsprekers ernstig beschadigd raken.
- Verbind in geen geval de aansluitingen van de luidsprekers met het chassis van de auto en sluit de aansluitingen van de rechter en linker luidspreker niet op elkaar aan.
- Probeer niet de luidsprekers parallel aan te sluiten.

有关扬声器连接的备注
- 请使用阻抗为 4Ω 至 8Ω 间的扬声器，且其额定功率符合本机要求。不然，扬声器有可能损坏。
- 不要把扬声器系统与汽车底盘相连，更不要把右扬声器系统与左扬声器系统连在一起。
- 不要以并连方式连接扬声器。

Connection Diagram / Schéma de connexion / Conexión del sistema / Systeem-aansluiting / 连接图

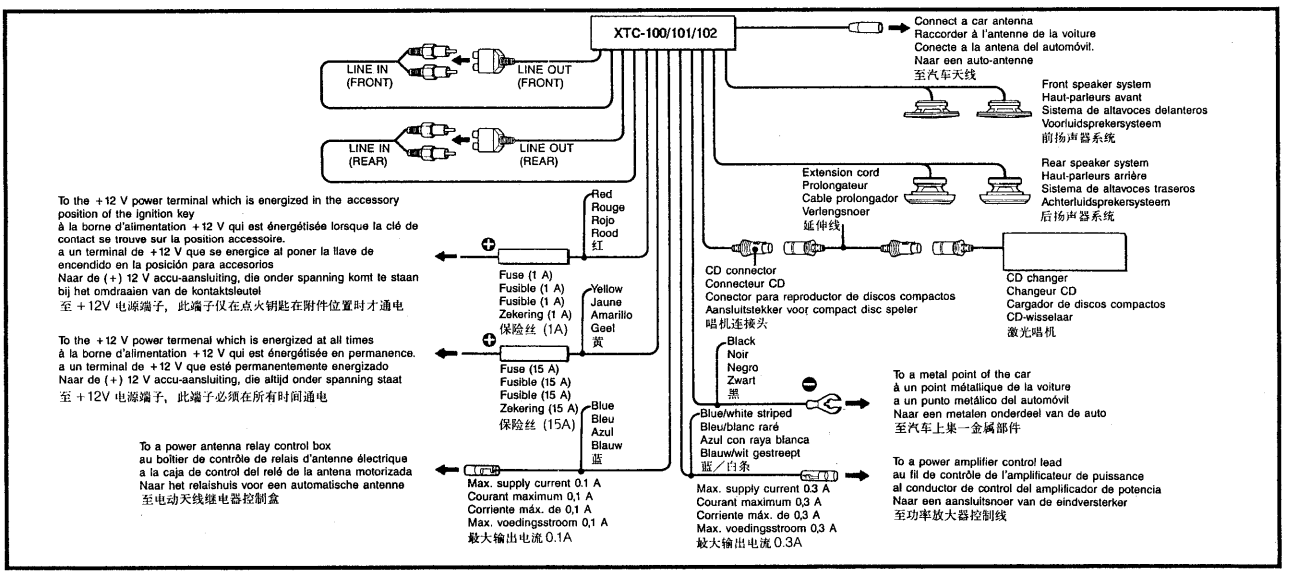

Notes on the control leads
- The power antenna control lead (blue) supplies + 12 V DC when you turn on the tuner or the ATA* function is activated. A power antenna without relay box cannot be used with this unit. For details about the power antenna, refer to the power antenna instruction manual.
- When the power antenna control lead or the power amplifier control lead is in contact with a metal part of the car, the unit cannot be turned on because the protection circuit is activated.

* Automatic Tuner Activation

Remarques sur les fils de contrôle
- Le fil de contrôle de l'antenne electrique (bleu) fournit une alimentation de courant continu positif de 12 volts lorsque le tuner est mis sous stension ou la fonction ATA* est activée. Une antenne électrique sans boîtier de relais ne peut être utilisée avec et appareil. Pour plus de détails sur l'antenne electrique, se reporter à son mode d'emploi.
- Lorsque le fil de contrôle de l'antenne electrique ou le fil de contrôle de l'amplificateur de puissance est en contact avec une partie métallique de la voiture, l'appareil ne peut être mis sous tension puisque le circuit de protection est alors activé.

* Automatic Tuner Activation (enclenchement automatique du tuner)

Notas sobre los conductores de control
- El conductor de control de la antena motorizada (azul) suministrará +12 V CC cuando conecte la alimentación del sintonizador o se active la función de ATA*. Con esta unidad no podrá emplearse una antena motorizada sin caja de relé. Con respecto a los detalles sobre la antena motorizada, consulte el manual de instrucciones de la misma.
- Si el conductor de control de la antena motorizada o el de control del amplificador de potencia entra en contacto con una parte metálica del automóvil, esta unidad no funcionará debido a que se activará el circuito de protección.

* Activación automática del sintonizador

Opmerking over de aansluitsnoeren
- Het aansluitsnoer voor de automatische antenne (blauw) levert 12 V gelijkstroom als de tuner wordt ingeschakeld of als de ATA* funktie in werking treedt. Met dit apparaat is het niet mogelijk een automatische antenne zonder relaishuis te gebruiken. Zie de gebruiksaanwijzing van de automatische antenne voor nadere details over de antenne.
- Als het aansluitsnoer van de automatische antenne of dat van de eindversterker in kontakt komt met een metalen onderdeel van de auto, kan het apparaat niet ingeschakeld worden aangezien dan het beveiligingscircuit in werking is gezet.

* Automatische Tuner Aktivatie

有关控制线的备注
- 当您打开收音机调谐器或 ATA* 功能启动时，电动天线控制或（蓝）将提供 +12V DC 电源。不带继电器盒的电动天线无法与本机器连用。有关电动天线的详情，请参阅电动天线的操作说明书。
- 当电动天线控制线或功率放大器控制线碰到汽车金属部件时，由于机内保护电路的作用，机器无法打开。

* ATA 功能，即为 Automatic Tuner Activation（调谐器自动启动功能）之略。

After completing the connections, press the reset button of this unit.
The reset button is located on the front side of the unit hidden by the front detachable panel.

Après avoir terminé les connexions, appuyer sur la touche de réinitialisation.
Cette touche est située à l'avant de l'appareil, cachée par le panneau amovible.

Después de haber realizado las conexiones, presione el botón de reposición de esta unidad. El botón de reposición se encuentra en la parte frontal de la unidad oculta por el panel frontal desmontable.

Nadat alle aansluitingen gemaakt zijn, dient u op de terugsteltoets van dit apparaat te drukken.

连接完成后，按一下主机的重整键。此键位於主机前部，平时被前面板遮住。

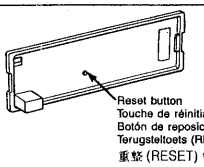

Press the button with a ball-point pen or similar objects .

Appuyer sur la touche à l'aide d'une stylo ou autre objet similaire.

Presione el botón con un bolígrafo u otro objeto similar.

Druk op de toets met een potlood of een vergelijkbaar voorwerp.

用圆珠笔或类似用具按此键。

SECTION 2
ADJUSTMENTS

FM Auto Scan/Stop Level Adjustment

Setting:

Band switch: : FM
MONO switch : ON
Frequency : 97.9 MHz (US, Canadian model)
98.0 MHz (AEP, E, Germany model)

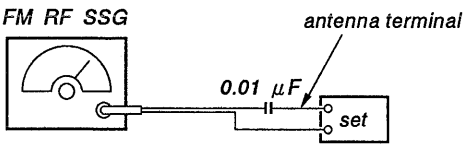

Carrier frequency: 97.9 MHz (US, Canadian model)
98.0 MHz (AEP, E, Germany model)
Output level: 25 dB (18 μV)
Mode: mono, unmodulated

Procedure:

1. Tune in 97.9 MHz (US, Canadian model) or 98.0 MHz (AEP, E, Germany model).
2. Turn RV501 clockwise and make the voltage low.
3. Adjust RV501 so that the VTVM reading changes from low to high (5 V reference voltage).
4. When the FM RF SSG's output level is 25 ± 4 dB, check that the auto scan is stopped.

AM (MW) Auto Scan/Stop Level Adjustment

Note: This adjustment should be made after FM auto scan stop level adjustment is completed.

Setting:

Band switch: AM (XTC-100/102) or MW (XTC-101)
Frequency: 999 kHz (AEP, E, Germany model)
1,000 kHz (US, Canadian model)

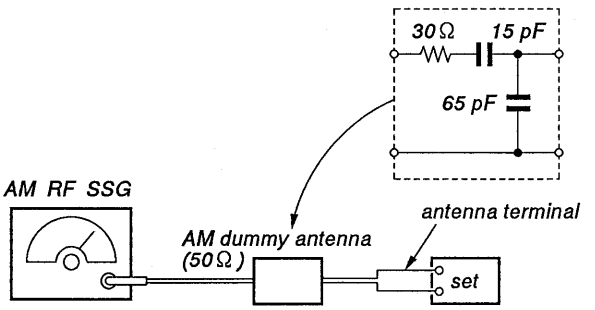

[AM (MW)]
Carrier frequency: 999 kHz (AEP, E, Germany model)
1,000 kHz (US, Canadian model)
Output level: 30 dB (32 μV)
Mode: no modulation

Procedure:

1. Tune in above frequency.
2. Turn the adjusting volume in AM tuner pack and make the voltage low at Pin ⑫ of IC502.
3. Adjust the volume in AM tuner pack so that the VTVM reading changes from low to high (5 V reference voltage).
4. When the AM RF SSG's output level is 30 ± 4 dB, check that the auto scan is stopped.

FM Stereo Separation Adjustment

Setting:

Band switch: FM
Frequency: 83.0 MHz

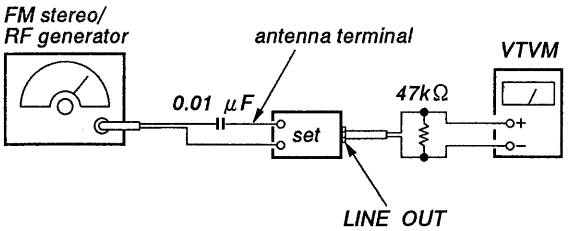

Carrier frequency: 83.0 MHz
Output level: 70 dB (3.2 mV)
Modulation: main; 1 kHz, 33.75 kHz deviation
sub; 19 kHz, 7.5 kHz deviation
38 kHz pilot; 33.75 kHz deviation

Procedure:

1. Adjust RV502 for a best stereo separation at a LINE OUT.
   More than − 10 dB is good.

FM stereo signal generator output channel	VTVM connection	VTVM reading (dB)
L-CH	L-CH	Ⓐ
R-CH	L-CH	Ⓑ Adjust RV502 for minimum reading.
R-CH	R-CH	Ⓒ
L-CH	R-CH	Ⓓ Adjust RV502 for minimum reading.

L-CH Stereo separation: Ⓐ − Ⓑ
R-CH Stereo separation: Ⓒ − Ⓓ
The separations of both channels should be equal.

FM Center Adjustment

Setting:

Band switch: FM
SENS switch: ON (MONO)
Frequency: 97.9 MHz (US, Canadian model)
98.0 MHz (AEP, E, Germany model)

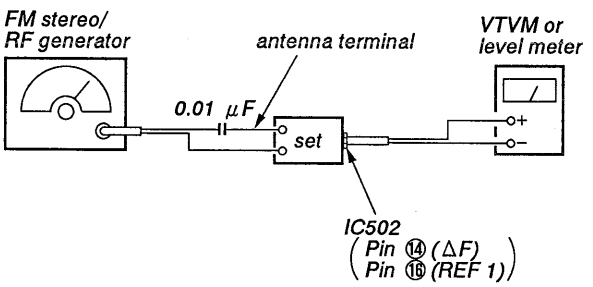

Carrier frequency: *97.9 MHz (US, Canadian model)*
98.0 MHz (AEP, E, Germany model)
Output level: *25 dB (18 μV)*
Modulation: *no modulation*

Procedure:

Adjust with FL501 so that the VTVM reading becomes to the 0 ±30 mV.

ARI Level Adjustment (XTC-102 only)

Setting:

Band switch: FM

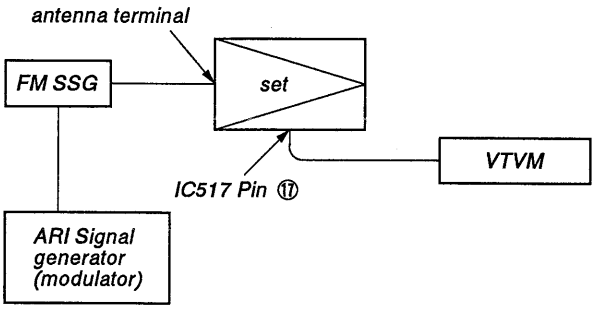

Frequency: *98.0 MHz*
Modulation: *ARI carrier only*
Output level: *60 dB (1 mV)*

Procedure:

1. Adjust T901 so that the level of 125 Hz signal becomes maximum.
2. Adjust RV90 in the same way.

Specification: 1 Vrms or more.

Adjustment Location:

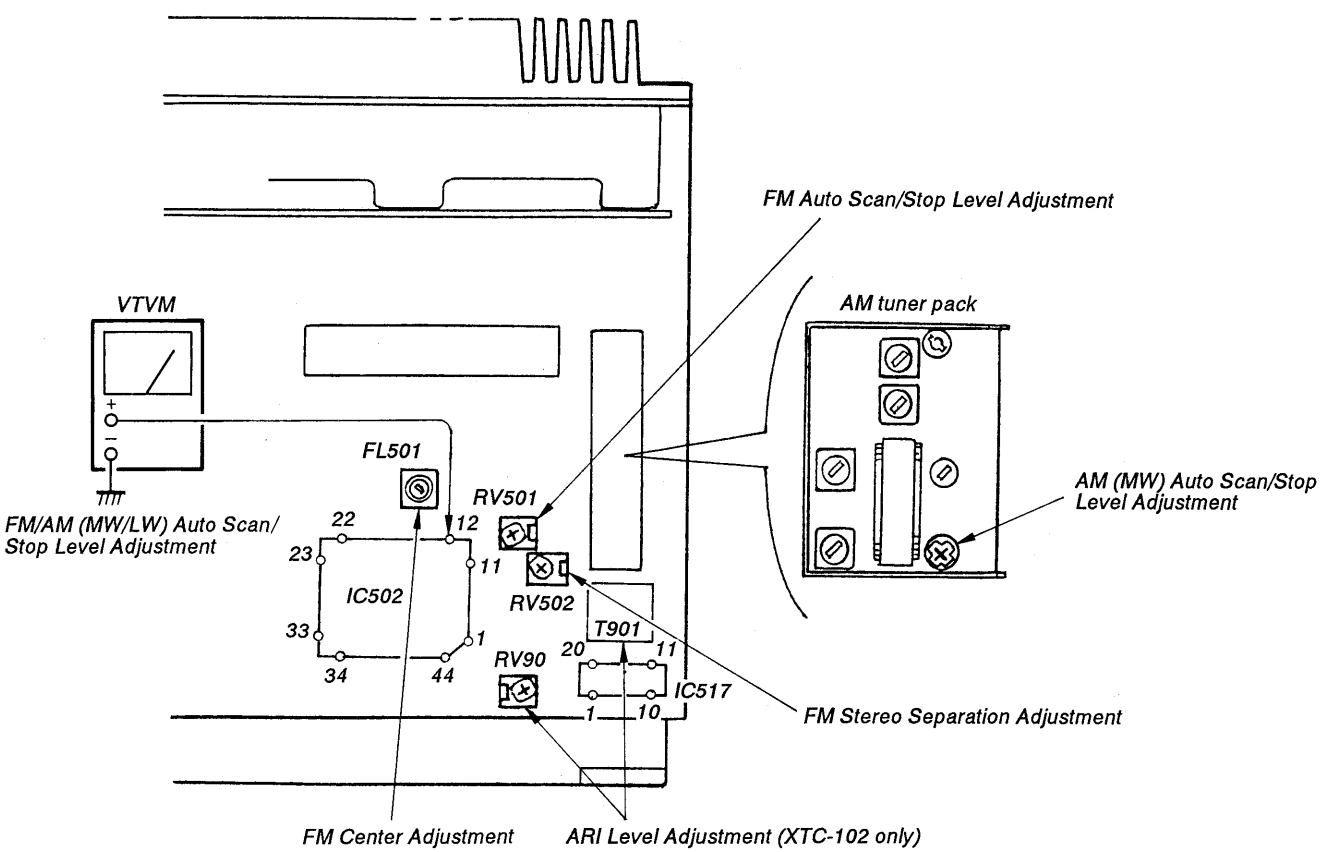

LW Auto Scan/Stop Level Adjustment (XTC-101 only)

Note: This adjustment should be made after MW•LW auto scan stop level adjustment is completed.

Setting:

Band switch : LW
Frequency: 216 kHz

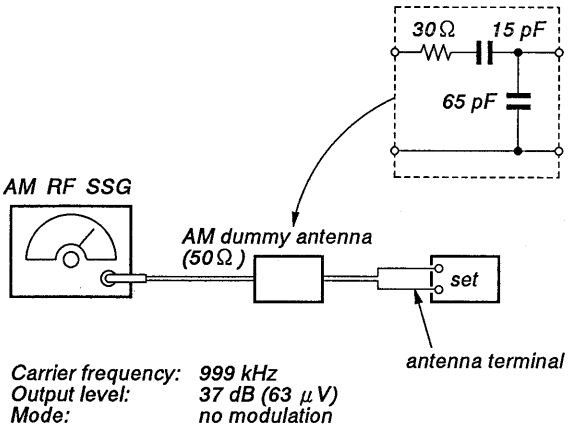

Procedure:

1. Tune in 216 kHz.
2. Adjust the volume in AM tuner pack so that the VTVM reading changes from low to high (5 V reference voltage).
3. When the AM RF SG's output level is 37 ± 6 dB, check that the auto scan stopped.

SECTION 3
DIAGRAMS

3-1. IC501 (μPD75516GF-2483B9), IC801 (μPD6125AG-729) FUNCTIONAL DESCRIPTION

IC501 (μPD75516GF-2483B9) Description

Pin No.	Pin Name	I/O	Description
1	A0	I	Destination setting input
2	AV REF	I	A/D converter reference voltage input
3	VDD	–	Positive power input
4	VDD	–	Positive power input
5	N.C.	–	open
6	N.C.	–	open
7	N.C.	–	open
8	N.C.	–	open
9	Low	I	0 V fixed
10	High	I	+5 V fixed
11	High	I	+5 V fixed
12	Low	I	0 V fixed
13	MUTE	O	Muting control
14	COLOR	O	Color illumination switching control
15	VOL CE	O	Electronic volume enable signal
16	LCD CE	O	LCD driver enable signal
17	DATA IN	I	Information input from PLL-IC
18	DATA OUT	O	Serial data output
19	CLK OUT	O	Serial transmission clock
20	PLL CE	O	PLL-IC enable signal
21	KI 3	I	Key information input
22	KI 2	I	Key information input
23	KI 1	I	Key information input
24	KI 0	I	Key information input
25	KO 7	–	Key-return signal source
26	KO 6	–	Key-return signal source
27	N.C.	–	open
28	$\overline{\text{JACK}}$	I	WALKMAN plug-in detection
29	$\overline{\text{R.POWER}}$	O	Power supply switch for ICs on Display board
30	N.C.	–	open
31	N.C.	–	open
32	N.C.	–	open
33	GND	–	Ground
34	SIG2	O	Audio-signal switching signal
35	SIG1	O	Audio-signal switching signal
36	AUX ON	O	Audio-signal switching signal
37	PW-A MUTE	O	POWER-AMP mute
38	N.C.	–	open
39	N.C.	–	open
40	N.C.	–	open
41	MONO/$\overline{\text{ST}}$	I/O	Auto stereo/forced monochrome select
42	TU ON	O	Tuner power-antenna output

Pin No.	Pin Name	I/O	Description
43	ILL ON	O	Illumination output
44	POWER ON	O	System power output
45	BEEP	O	Buzzer output signal (2 kHz/1 kHz)
46	DK	I	DK signal input
47	SK	I	SK signal input
48	BK	I	BK signal input
49	REMOCON	I	Remote Control input
50	CD DATA IN	I	Auto changer information input
51	–	I	–
52	CD CLK IN	I	CD data input clock
53	B.U.C	I	Back-up check
54	GND	–	Ground
55	XT1	I	Subsystem clock (32.7 kHz)
56	XT2	O	Subsystem clock (32.7 kHz)
57	GND	–	Ground
58	X1	I	Main clock (4.19 MHz)
59	X2	O	Main clock (4.19 MHz)
60	RESET	I	Reset input
61	CD DATA	O	CD data transmission data line
62	CD CLK	O	CD data transmission clock line
63	DISP SEL	O	Display-select
64	OUTRUN	O	open
65	CD MUTE	I	CD mute request input
66	CD CHEC	I	CD loaded/not loaded check
67	$\overline{\text{AUA MUTE}}$	I	+5 V fixed
68	$\overline{\text{RFM IN}}$	I	+5 V fixed
69	HANDLE	I	PANEL FRONT loaded/not loaded check
70	ILL IN	I	0V fixed
71	N.C.	–	open
72	N.C.	–	open
73	GND	–	Ground
74	ACC.C	I	Accessory input
75	LINE IN	I	0 V fixed
76	N.C.	–	open
77	N.C.	–	open
78	TEST	I	+5 V fixed
79	A2	I	Regions setting input
80	A1	I	Regions setting input

IIC801 (μPD6125AG-729) Description

Pin No.	Pin Name	I/O	Description
1	I/O 00	I	Key information input
2	I/O 01	I	Key information input
3	I/O 02	I	Key information input
4	I/O 03	I	Key information input
5	S-IN	–	open
6	S-OUT	O	Serial data output
7	REM	–	open
8	VDD	–	Power input
9	OSC OUT	O	Clock out
10	OSC IN	I	Clock in
11	GND	–	Ground
12	RST	I	Reset
13	KI 3	I	Key information input
14	KI 2	I	Key information input
15	KI 1	I	Key information input
16	KI 0	I	Key information input
17	KO 7	O	Key information output
18	KO 6	O	Key information output
19	KO 5	O	Key information output
20	KO 4	O	Key information output
21	KO 3	O	Key information output
22	KO 2	O	Key information output
23	KO 1	O	Key information output
24	KO 0	O	Key information output

3-2. BLOCK DIAGRAM

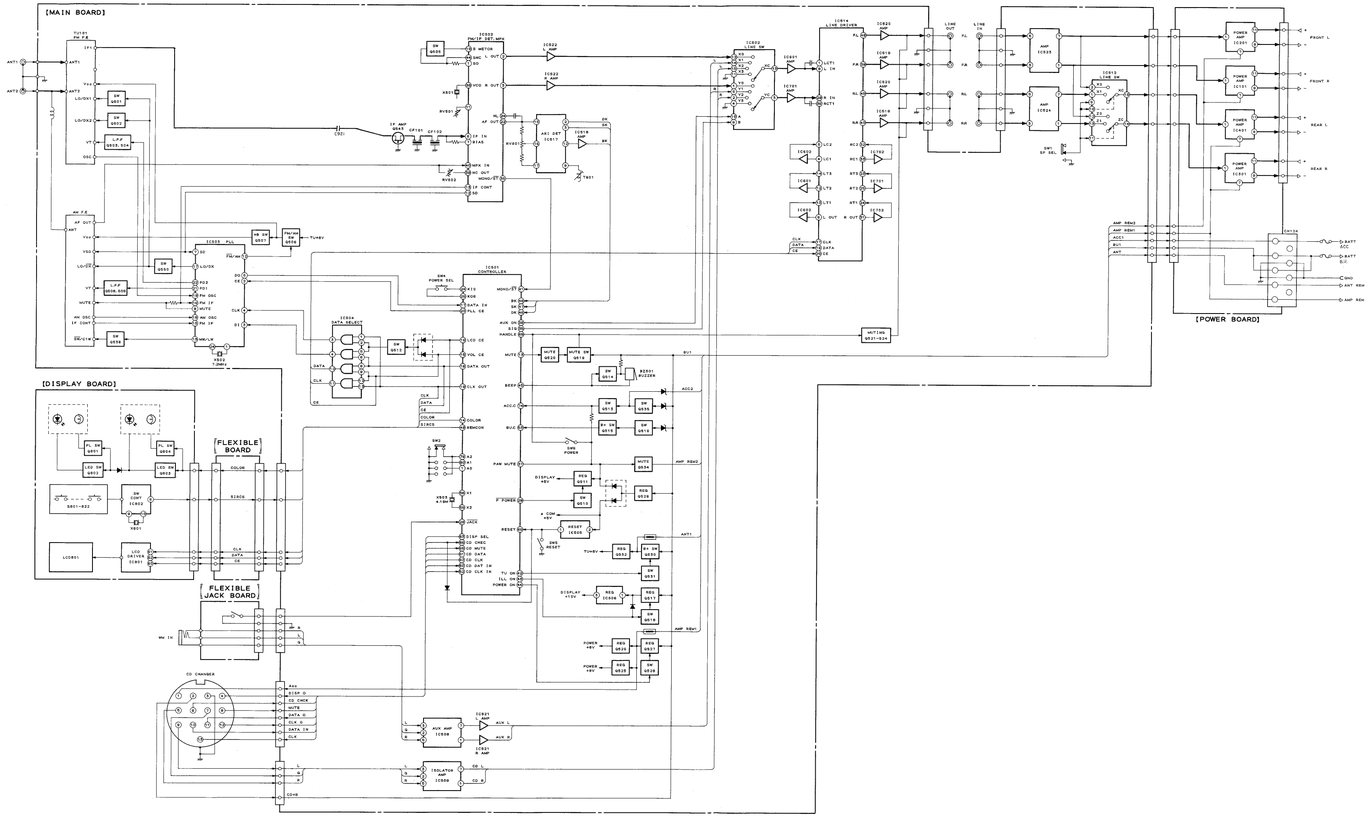

3-3. SCHEMATIC DIAGRAM

Note:

- All capacitors are in μF unless otherwise noted. pF: μμF 50 WV or less are not indicated except for electrolytics and tantalums.
- All resistors are in Ω and ¼ W or less unless otherwise specified.
- Components for right channel have same values as for left channel. Reference numbers are coded from
  - △ : internal component.
  - B+ : B + Line.
  - ▭ : adjustment for repair.
- Power voltage is dc 14.4 V and fed with regurated dc power supply from battery terminal.
- Voltages and waveforms are dc with respect to ground under no-signal (detuned) conditions.
  no mark : FM/AM/PB
  ( ) : AM
  < > : PB
- Voltages are taken with a VOM (10 MΩ/V).
  Voltage variations may be noted due to normal production tolerances.
- Signal path.
  ⇨ : FM ⇩ : PB

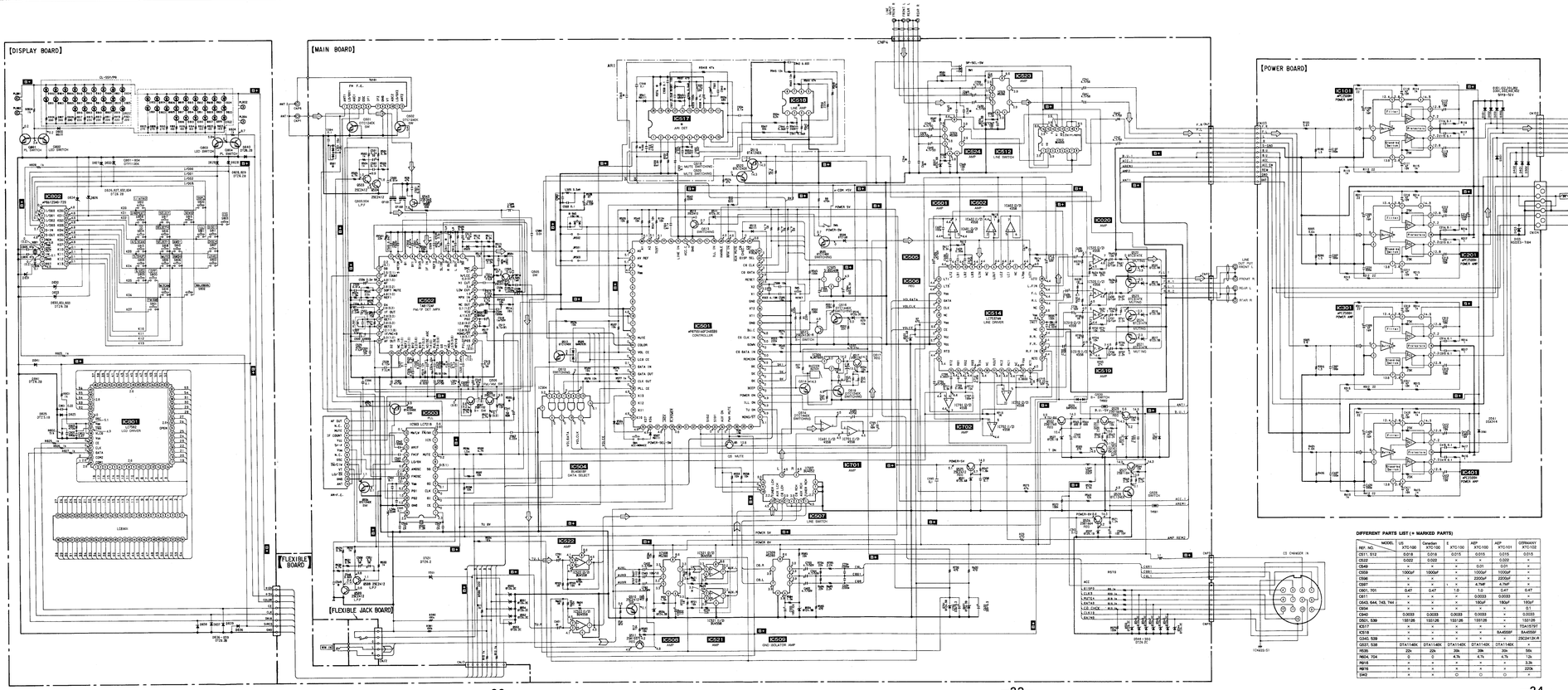

DIFFERENT PARTS LIST (* MARKED PARTS)

REF. NO.	MODEL US XTC-100	Canadian XTC-100	E XTC-100	AEP XTC-100	AEP XTC-101	GERMANY XTC-102
C511, 512	0.018	0.018	0.015	0.015	0.015	0.015
C522	0.022	0.022	×	×	0.022	×
C549	×	×	×	0.01	0.01	×
C559	1000pF	1000pF	×	1000pF	1000pF	×
C566	×	×	×	2200pF	2200pF	×
C567	×	×	×	4.7MF	4.7MF	×
C601, 701	0.47	0.47	1.0	1.0	0.47	0.47
C611	×	×	×	0.0033	0.0033	×
C643, 644, 743, 744	×	×	×	180pF	180pF	180pF
C654	×	×	×	×	×	0.1
C640	0.0033	0.0033	0.0033	0.0033	×	0.0033
C651, 539	1S5126	1S5126	1S5126	1S5126	×	1S5126
IC517	×	×	×	×	×	TSA1579T
IC518	×	×	×	×	8A4558F	8A4558F
Q340, 539	×	×	×	×	×	2SC2412K-R
Q537, 538	DTA114EK	DTA114EK	DTA114EK	DTA114EK	DTA114EK	×
R535	22k	22k	33k	33k	33k	56k
R604, 704	0	0	4.7k	4.7k	4.7k	12k
R616	×	×	×	×	×	3.3k
R618	×	×	×	×	×	220k
SW2	×	×	○	○	○	×

3-4. PRINTED WIRING BOARDS – MAIN SECTION –

• See page 36 for Semiconductor Lead Layouts.

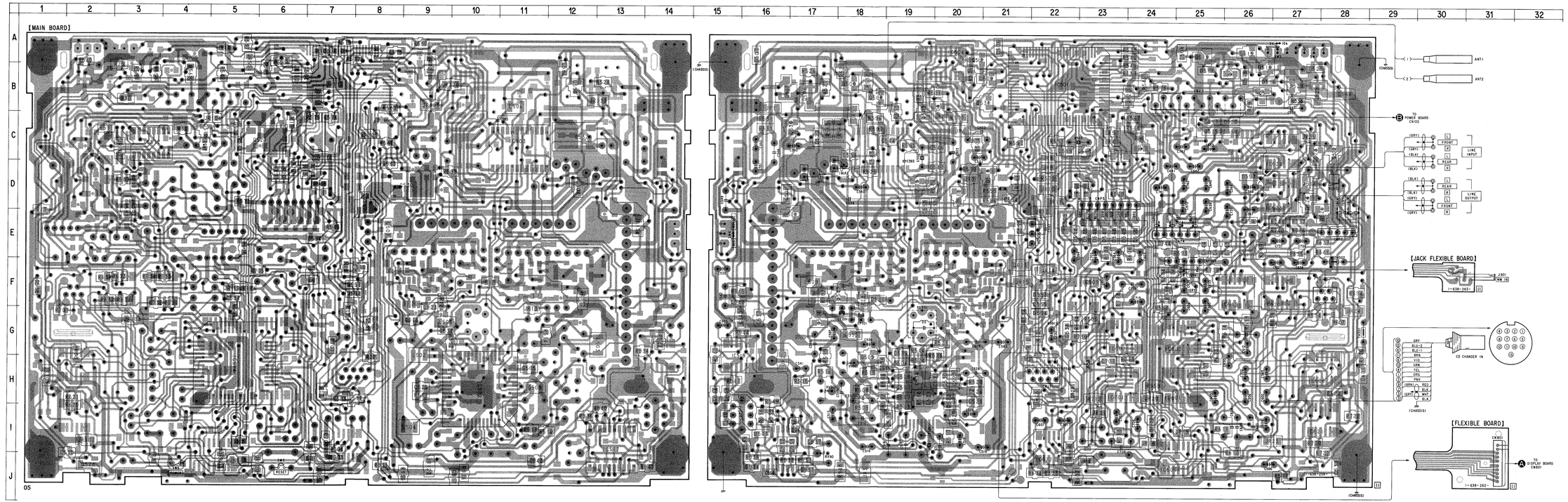

• **Semiconductor Location**

Ref. No.	Location	Ref. No.	Location
D501	E-16	IC517	I-13
D502	I-24	IC518	G-15
D503	I-19	IC519	F-28
D504	G-17	IC520	F-27
D506	A-21	IC521	I-27
D607	A-16	IC522	J-22
D508	B-26	IC523	D-27
D509	B-21	IC524	C-27
D511	B-25	IC601	H-24
D513	D-7	IC602	G-24
D516	B-26	IC701	H-23
D517	C-25	IC702	G-23
D518	C-26		
D519	C-25	Q5	B-26
D520	C-26	Q501	D-12
D521	B-27	Q502	D-20
D525	H-22	Q503	B-19
D527	C-17	Q504	B-19
D529	B-27	Q505	H-18
D531	D-20	Q506	B-17
D534	G-22	Q507	B-16
D536	F-1	Q508	B-18
D537	F-11	Q509	B-18
D539	F-9	Q510	F-7
D541	I-16	Q511	H-8
D544	E-22	Q512	A-12
D545	E-23	Q513	A-25
D546	E-23	Q514	D-27
D547	E-23	Q515	A-26
D548	E-23	Q516	B-26
D549	E-23	Q517	D-8
D550	E-24	Q518	D-21
D551	F-7	Q519	C-4
D552	F-7	Q520	C-5
D553	F-22	Q521	E-28
D554	G-22	Q522	C-28
D555	F-22	Q523	C-27
D556	E-26	Q524	D-27
D557	D-26	Q525	D-19
D601	H-28	Q526	J-2
D701	G-7	Q527	C-5
		Q528	C-24
IC501	B-22	Q529	B-29
IC502	H-10	Q530	D-8
IC503	C-11	Q531	B-20
IC504	A-20	Q532	C-12
IC505	E-22	Q535	B-26
IC506	E-26	Q536	C-17
IC507	J-24	Q537	G-20
IC508	H-27	Q538	G-21
IC509	F-23	Q543	F-18
IC512	C-3	Q550	B-12
IC514	H-5		

Note:

- ○——: parts extracted from the component side.
- ■ : parts mounted on the conductor side.
- ● : Through hole.
- ▒ : Pattern on the side which is seen.
- ▒ : Pattern of the rear side.

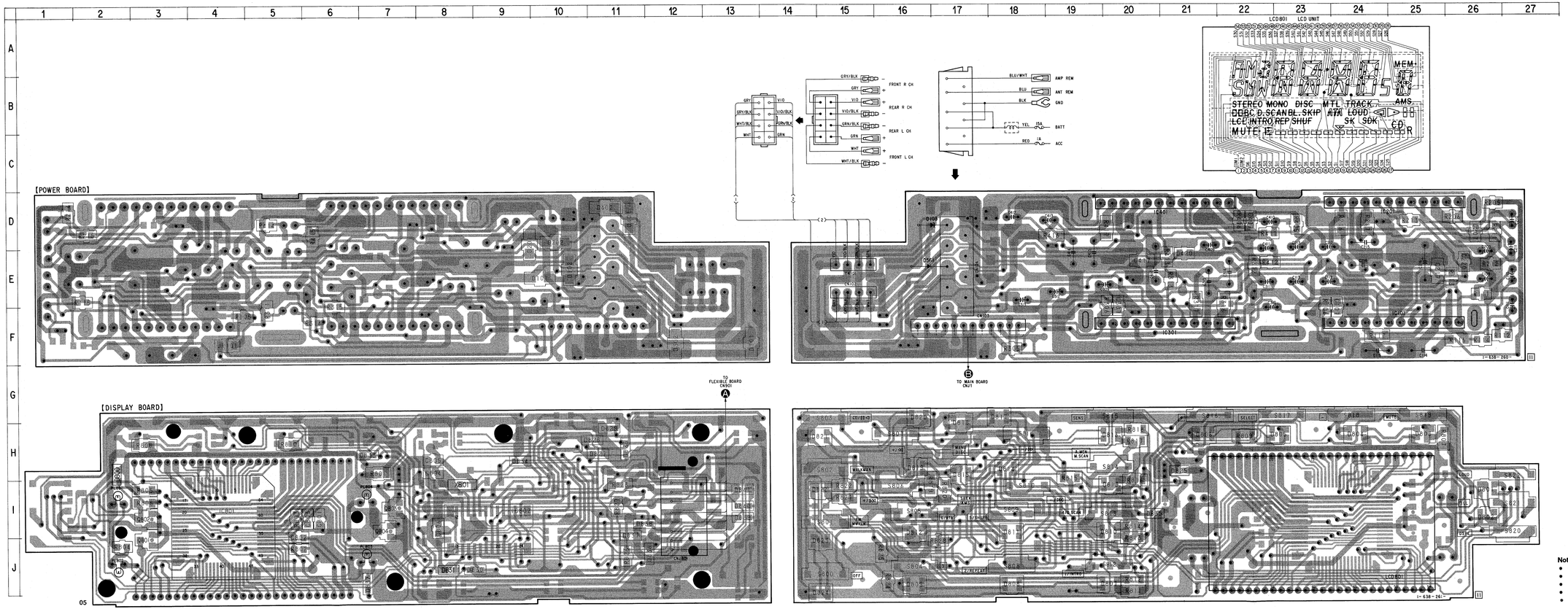

• **Semiconductor Location**

Ref. No.	Location
IC101	F-25
IC201	D-24
IC301	F-21
IC401	D-21
D101	E-10
D102	D-10
D103	A-16
D201	D-9
D202	D-10
D301	F-13
D302	F-12
D401	D-11
D402	D-11
D561	E-16

• **Semiconductor Location**

Ref. No.	Location
D801	I-26
D802	I-26
D803	H-25
D804	H-24
D805	H-23
D806	H-21
D807	J-20
D808	J-18
D809	J-16
D810	I-20
D811	I-18
D812	I-16
D813	I-20
D814	H-18
D815	H-17
D816	H-20
D817	G-18
D818	H-17
D819	H-16
D820	G-16
D821	H-15
D823	J-15
D824	J-20
D825	H-21
D826	H-11
D827	H-11
D828	H-11
D829	H-11
D830	J-8
D831	I-15
D832	J-12
D833	H-7
D834	H-9
D836	J-12
D837	I-11
D838	I-11
D839	I-13
D840	I-13
D841	I-13
IC801	I-4
Q801	J-3
Q802	I-3
Q803	I-7
Q804	I-7

Note:

- ○——— : parts extracted from the component side.
- ■ : parts mounted on the conductor side.
- ● : Through hole.
- ▒ : Pattern on the side which is seen.
- ▒ : Pattern of the rear side.

• IC Block Diagrams

IC101, 201, 301, 401 μPC2500H

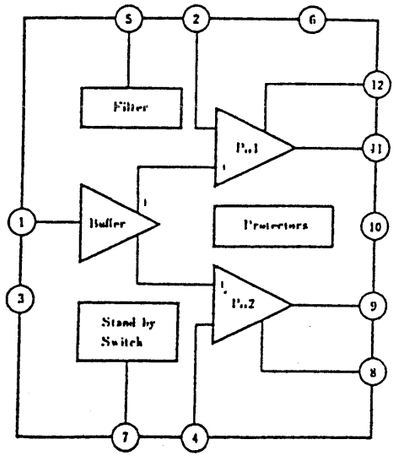

IC502 TA8172AF

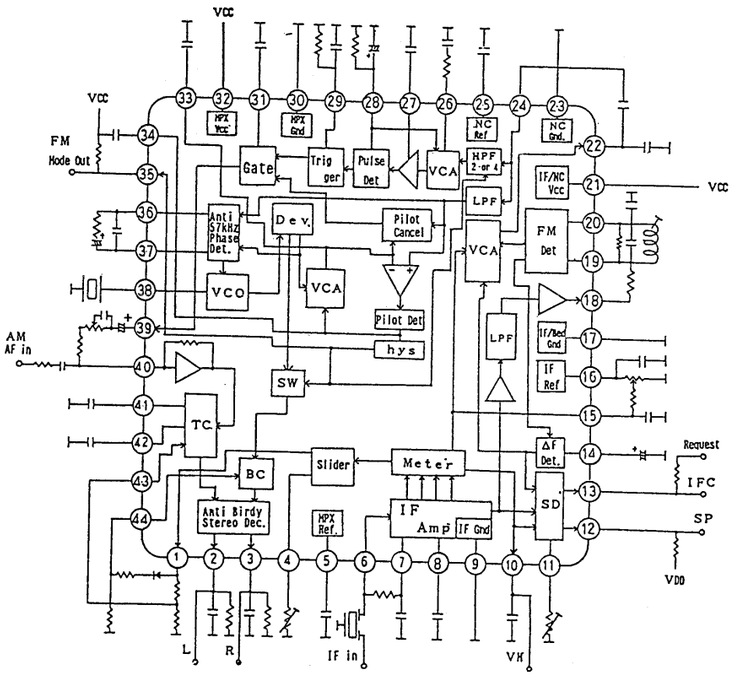

IC503 LC7218

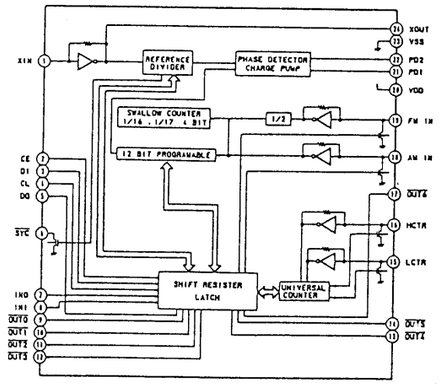

IC505 S-8054HN

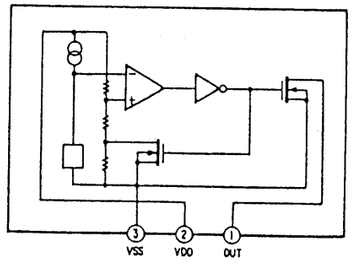

IC508, 509, 523, 524 M5280FP

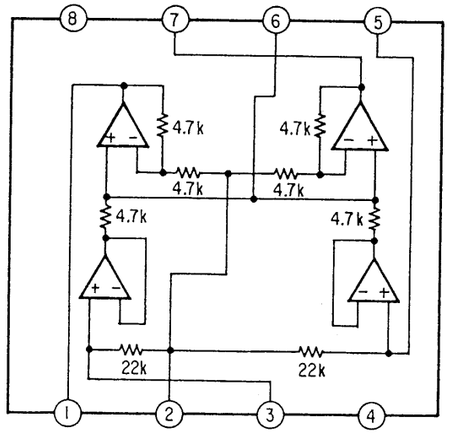

IC507 BU4052BF

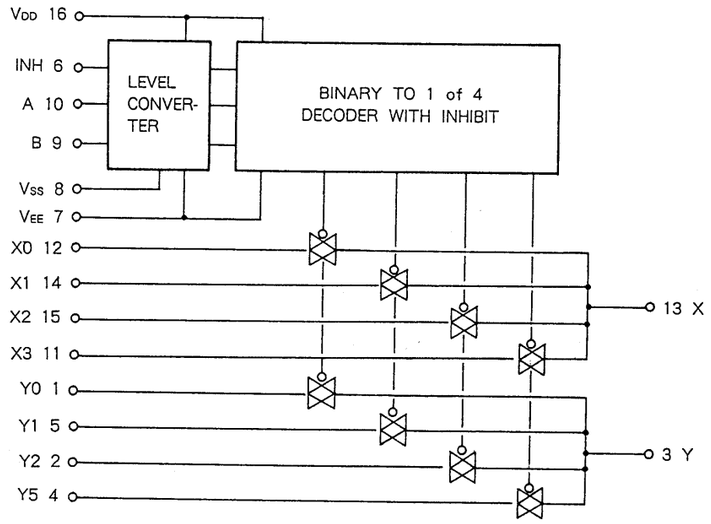

IC512 BU4053BF

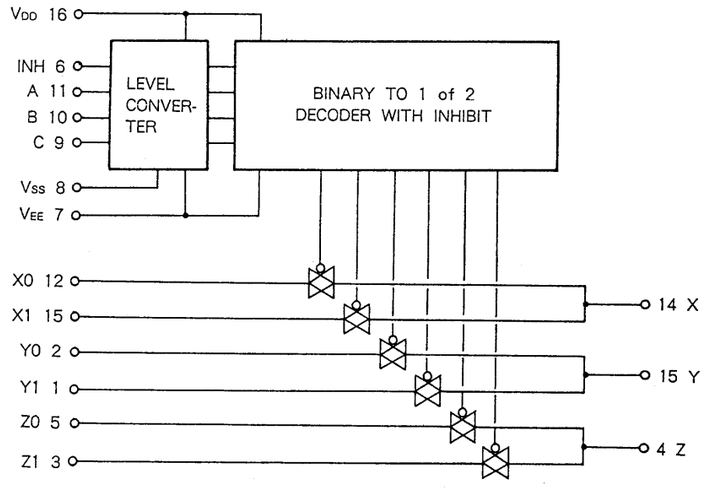

IC514 LC7537AN

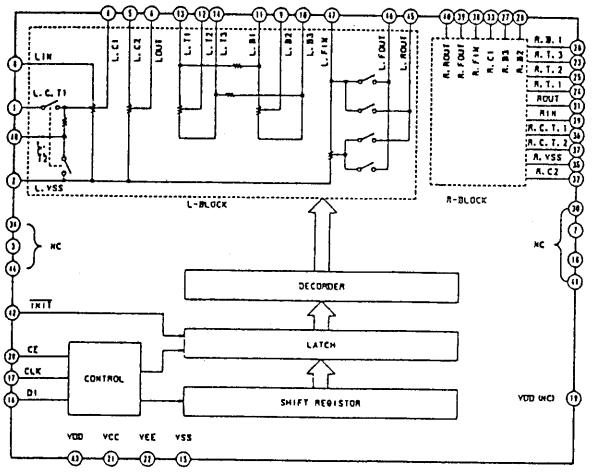

IC515, 516 TA7303P

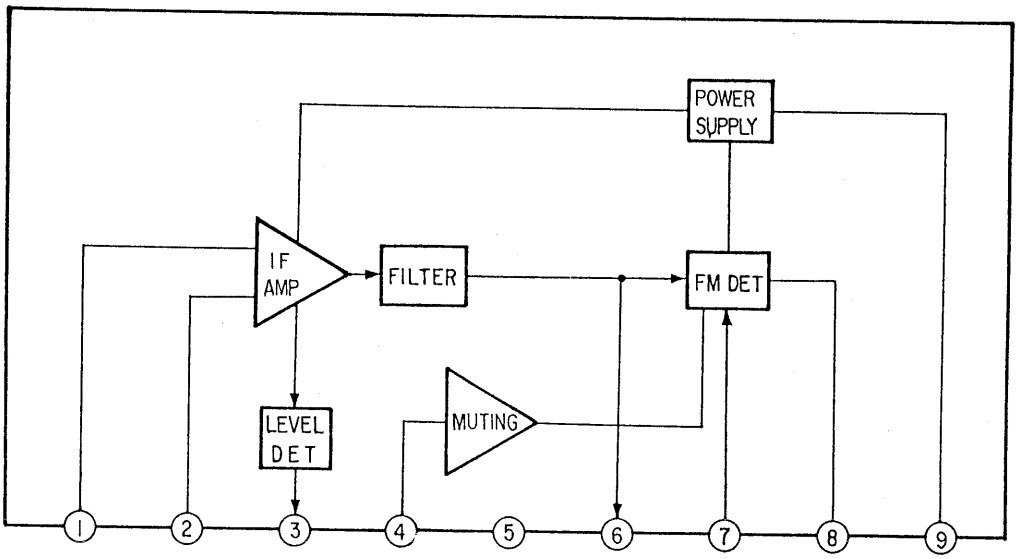

IC517 TDA1579T

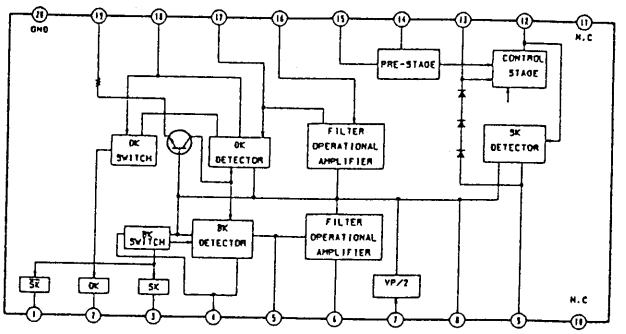

IC519 BA10393F

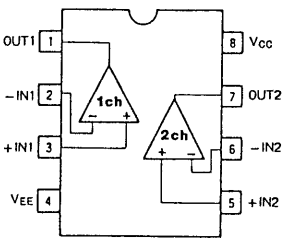

• Semiconductor Lead Layouts

BU4052BF
BU4053BF

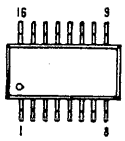

(TOP VIEW)

BU4081BF

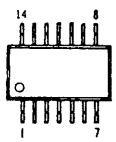

(TOP VIEW)

LC7218
μPD6125AG-729

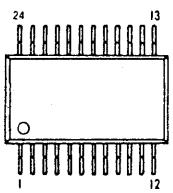

(TOP VIEW)

LC7537AN

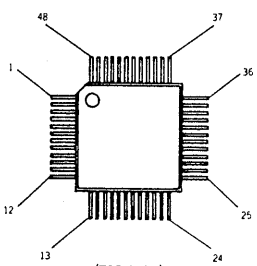

(TOP VIEW)

LC7582

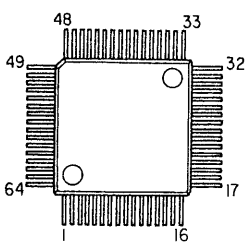

M5280FP

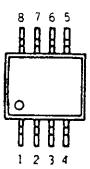

(TOP VIEW)

NJM7809FA

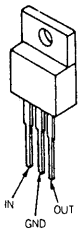

TA8172AF

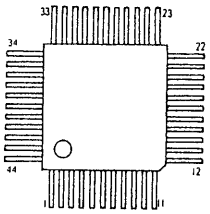

μPC2500H

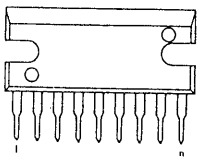

μPD-75516GF-248-3B9

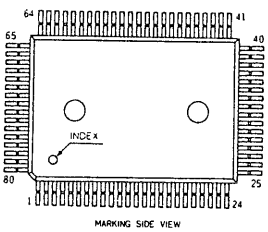

MARKING SIDE VIEW

DA204K-T146

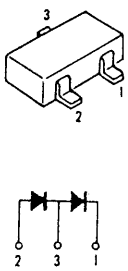

DTZ3.9B
DTZ4.3B
DTZ5.1B
DTZ6.2B
DTZ6.2C
DTZ9.1B
DTZ16B
MA111
MA8043-M-TX
MA8056-M-TX

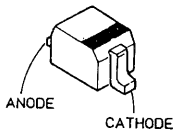

RD22ES-T1B4

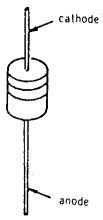

10E2

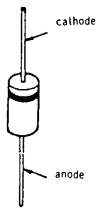

CL-155Y/PG-CD

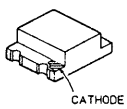

SECTION 4
EXPLODED VIEWS

NOTE:

- -XX and -X mean standardized parts, so they may have some difference from the original one.
- Color Indication of Appearance Parts Example:
  KNOB, BALANCE (WHITE) . . . (RED)
  ↑ Parts Color ↑ Cabinet's Color
- Items marked "*" are not stocked since they are seldom required for routine service. Some delay should be anticipated when ordering these items.
- The mechanical parts with no reference number in the exploded views are not supplied.
- Hardware (# mark) list is given in the last of this parts list.

The components identified by mark ⚠ or dotted line with mark ⚠ are critical for safety.
Replace only with part number specified.

(1) FRONT PANEL SECTION

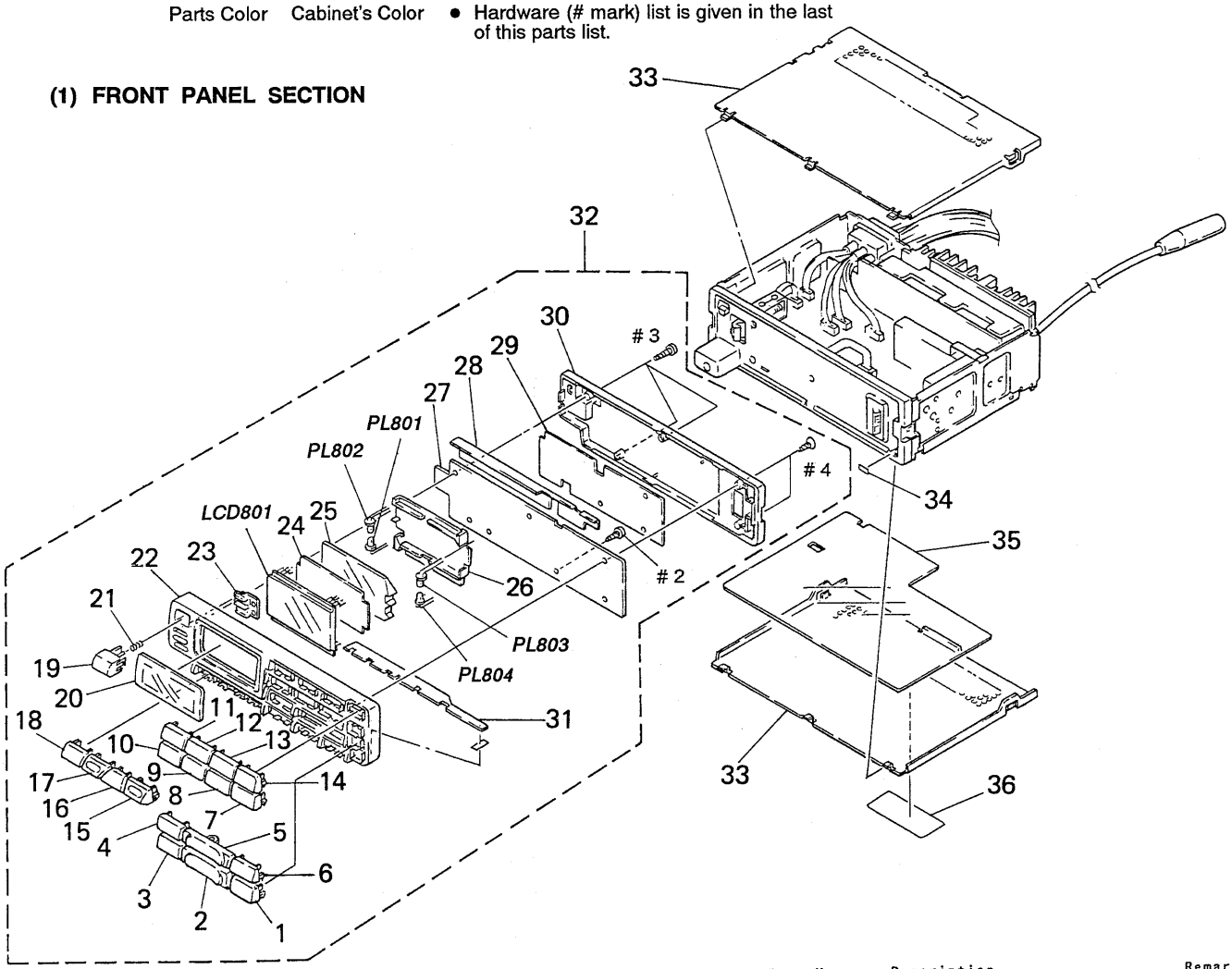

Ref. No.	Part No.	Description	Remark
1	3-366-644-01	BUTTON (CD)	
2	3-366-156-01	BUTTON (SEEK/AMS)	
3	3-366-155-11	BUTTON (SENS)	
4	3-366-155-01	BUTTON (A. MEM/M. SCAN)	
5	3-366-157-01	BUTTON (MANU/DISC)	
6	3-366-643-51	BUTTON (WALKMAN)	
7	3-366-643-01	BUTTON (FM/AM) (XTC-100/102)	
7	3-366-643-21	BUTTON (FM/MW/LW) (XTC-101)	
8	3-366-154-01	BUTTON (6/ATA)	
9	3-366-153-01	BUTTON (5/SHUF)	
10	3-366-152-01	BUTTON (4/D. SCAN)	
11	3-366-148-01	BUTTON (1/INTRO)	
12	3-366-149-01	BUTTON (2/REPEAT)	
13	3-366-150-01	BUTTON (3)	
14	3-366-642-01	BUTTON (OFF)	
15	3-366-634-01	BUTTON (+)	
16	3-366-635-01	BUTTON (SELECT)	
17	3-366-636-01	BUTTON (-)	
18	3-366-650-01	BUTTON (MUTE) (XTC-100/101)	
18	3-366-650-11	BUTTON (MUTE) (XTC-102)	
19	3-366-159-01	BUTTON (RELEASE)	
20	3-366-147-01	WINDOW	
21	3-884-026-00	SPRING, COMPRESSION	
22	3-366-146-01	PANEL (FRONT) (XTC-100)	
22	3-366-146-11	PANEL (FRONT) (XTC-101)	
22	3-366-146-21	PANEL (FRONT) (XTC-102)	
23	3-366-158-01	BUTTON (ILL)	
24	3-349-440-01	SHEET (REFLECTOR)	
25	* 3-357-086-01	PLATE (LCD), LIGHT GUIDE	
26	* 3-357-087-01	HOLDER (LCD)	
27	* A-3222-250-A	DISPLAY BOARD, COMPLETE	
28	3-369-642-01	SHEET (B)	
29	3-369-644-01	SHEET (D)	
30	3-366-160-01	PANEL (REAR)	
31	3-369-641-01	SHEET (A)	
32	* A-3252-085-A	PANEL ASSY, FRONT (XTC-100)	
32	* A-3252-164-A	PANEL ASSY, FRONT (XTC-101)	
32	* A-3252-165-A	PANEL ASSY, FRONT (XTC-102)	
33	* 3-366-178-01	COVER	
34	3-369-643-01	SHEET (C)	
35	3-370-673-01	INSULATOR (A)	
36	* 3-367-814-01	LABEL, MODEL NUMBER (US)	
36	* 3-367-815-01	LABEL, MODEL NUMBER (Canadian)	
36	* 3-367-816-01	LABEL, MODEL NUMBER (E)	
36	* 3-367-817-01	LABEL, MODEL NUMBER (XTC-100; AEP)	
36	* 3-367-818-01	LABEL, MODEL NUMBER (XTC-101; AEP)	
36	* 3-367-819-01	LABEL, MODEL NUMBER (GERMANY)	
PL801	1-518-553-11	LAMP, PILOT (GREEN)	
PL802	1-518-553-11	LAMP, PILOT (RREEN)	
PL803	1-518-646-11	LAMP, PILOT (AMBER)	
PL804	1-518-646-11	LAMP, PILOT (AMBER)	

(2) CHASSIS SECTION

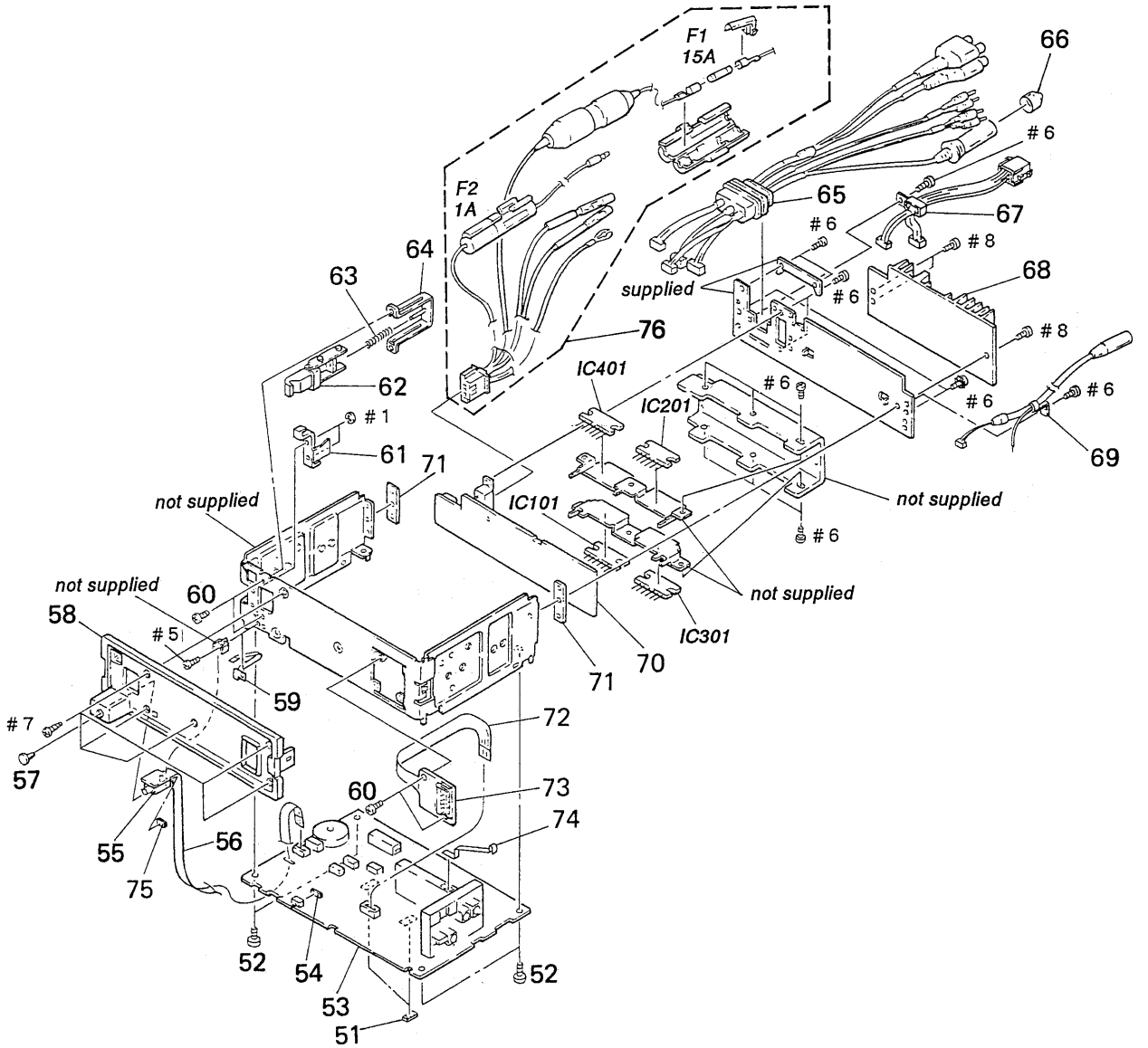

Ref. No.	Part No.	Description	Remark
51	* 3-360-122-01	SPACER (P)	
52	3-344-501-11	SCREW (+ PTT 3X8), GROUND POINT	
53	* A-3222-215-A	MAIN BOARD, COMPLETE	
53		(XTC-100; US, Canadian)	
53	* A-3222-254-A	MAIN BOARD, COMPLETE (XTC-100; E, AEP)	
53	* A-3222-255-A	MAIN BOARD, COMPLETE (XTC-101)	
53	* A-3222-256-A	MAIN BOARD, COMPLETE (XTC-102)	
54	* 3-370-441-01	SPACER (K)	
55	1-563-715-11	JACK (WM IN)	
56	1-638-263-11	JACK FLEXIBLE BOARD	
57	3-368-115-01	COVER (WM)	
58	3-366-161-01	PANEL (MAIN)	
59	* 3-366-180-01	PLATE, SPRING	
60	3-329-301-01	SCREW (2.6X3) (S TIGHT), TAPPING	
61	* 3-366-172-01	PLATE, LOCK	
62	* X-3362-645-1	JOINT ASSY	
63	3-366-182-01	SPRING, COMPRESSION	
64	* X-3362-644-1	BRACKET ASSY	
65	1-590-477-11	CORD (WITH CONNECTOR)	
66	3-566-347-00	COVER (A), CONNECTOR	
67	1-590-512-11	CORD (WITH CONNECTOR)	
68	* 3-366-179-01	HEAT SINK (B)	
69	1-574-339-11	CORD (WITH CONNECTOR)	
70	* A-3222-218-A	POWER BOARD, COMPLETE	
71	9-911-839-XX	SHEET (HEAT INSULATING)	
72	1-638-262-11	10P FLEXIBLE BOARD	
73	1-580-806-11	CONNECTOR 10P	
74	* 3-369-966-01	PLATE, GROUND	
75	* 3-366-183-01	SHEET, INSULATING	
76	1-590-825-11	CORD (WITH CONNECTOR)	
F1	⚠ 1-532-552-11	FUSE, GLASS TUBE 15A	
F2	⚠ 1-532-414-11	FUSE, GLASS TUBE 1A	
IC101	8-759-147-25	IC uPC2500H	
IC201	8-759-147-25	IC uPC2500H	
IC301	8-759-147-25	IC uPC2500H	
IC401	8-759-147-25	IC uPC2500H	

SECTION 5
ELECTRICAL PARTS LIST

DISPLAY

NOTE:

- Due to standardization, replacements in the parts list may be different from the parts specified in the diagrams or the components used on the set.
- -XX and -X mean standardized parts, so they may have some difference from the original one.
- RESISTORS
  All resistors are in ohms.
  METAL: Metal-film resistor
  METAL OXIDE: Metal Oxide-film resistor
  F: nonflammable
- Items marked "*" are not stocked since they are seldom required for routine service. Some delay should be anticipated when ordering these items.
- SEMICONDUCTORS
  In each case, u: μ, for example:
  uA...: μA..., uPA...: μPA...,
  uPB...: μPB..., uPC...: μPC...,
  uPD...: μPD...
- CAPACITORS
  uF: μF
- COILS
  uH: μH

The components identified by mark ⚠ or dotted line with mark ⚠ are critical for safety.
Replace only with part number specified.

When including parts by reference number, please include the board name.

Ref. No.	Part No.	Description			Remark
	* A-3222-250-A	DISPLAY BOARD, COMPLETE			
		**********			
	1-572-655-11	SWITCH, KEYBOARD			
	1-580-807-11	CONNECTOR (FEMALE) 10P			
	3-349-440-01	SHEET (REFLECTOR)			
	* 3-357-086-01	PLATE (LCD), LIGHT GUIDE			
	* 3-357-087-01	HOLDER (LCD)			
		< CAPACITOR >			
C801	1-164-222-11	CERAMIC CHIP	0.22uF		25V
C802	1-163-137-00	CERAMIC CHIP	680PF	5%	50V
C803	1-164-005-11	CERAMIC CHIP	0.47uF		25V
C804	1-163-109-00	CERAMIC CHIP	47PF	5%	50V
C805	1-163-109-00	CERAMIC CHIP	47PF	5%	50V
C806	1-164-004-11	CERAMIC CHIP	0.1uF	10%	25V
		< DIODE >			
D800	8-719-404-49	DIODE	MA111		
D801	8-719-987-45	DIODE	CL-155Y/PG-CD		
D802	8-719-987-45	DIODE	CL-155Y/PG-CD		
D803	8-719-987-45	DIODE	CL-155Y/PG-CD		
D804	8-719-987-45	DIODE	CL-155Y/PG-CD		
D805	8-719-987-45	DIODE	CL-155Y/PG-CD		
D806	8-719-987-45	DIODE	CL-155Y/PG-CD		
D807	8-719-987-45	DIODE	CL-155Y/PG-CD		
D808	8-719-987-45	DIODE	CL-155Y/PG-CD		
D809	8-719-987-45	DIODE	CL-155Y/PG-CD		
D810	8-719-987-45	DIODE	CL-155Y/PG-CD		
D811	8-719-987-45	DIODE	CL-155Y/PG-CD		
D812	8-719-987-45	DIODE	CL-155Y/PG-CD		
D813	8-719-987-45	DIODE	CL-155Y/PG-CD		
D814	8-719-987-45	DIODE	CL-155Y/PG-CD		
D815	8-719-987-45	DIODE	CL-155Y/PG-CD		
D816	8-719-987-45	DIODE	CL-155Y/PG-CD		
D817	8-719-987-45	DIODE	CL-155Y/PG-CD		
D818	8-719-987-45	DIODE	CL-155Y/PG-CD		
D819	8-719-987-45	DIODE	CL-155Y/PG-CD		
D820	8-719-987-45	DIODE	CL-155Y/PG-CD		
D821	8-719-987-45	DIODE	CL-155Y/PG-CD		
D822	8-719-987-45	DIODE	CL-155Y/PG-CD		
D823	8-719-987-45	DIODE	CL-155Y/PG-CD		
D824	8-719-987-45	DIODE	CL-155Y/PG-CD		
D825	8-719-976-99	DIODE	DTZ5.1B		
D826	8-719-977-07	DIODE	DTZ6.2B		
D827	8-719-977-07	DIODE	DTZ6.2B		
D828	8-719-977-07	DIODE	DTZ6.2B		
D829	8-719-977-07	DIODE	DTZ6.2B		
D830	8-719-977-07	DIODE	DTZ6.2B		
D831	8-719-977-07	DIODE	DTZ6.2B		
D832	8-719-977-07	DIODE	DTZ6.2B		
D833	8-719-977-07	DIODE	DTZ6.2B		
D834	8-719-977-07	DIODE	DTZ6.2B		
D836	8-719-977-07	DIODE	DTZ6.2B		
D837	8-719-977-07	DIODE	DTZ6.2B		
D838	8-719-977-07	DIODE	DTZ6.2B		
D839	8-719-977-07	DIODE	DTZ6.2B		
D840	8-719-977-07	DIODE	DTZ6.2B		
D841	8-719-977-07	DIODE	DTZ6.2B		
		< IC >			
IC801	8-759-821-44	IC	LC7582		
		< DISPLAY PANEL >			
LCD801	1-808-773-11	DISPLAY PANEL, LIQUID CRYSTAL			

DISPLAY | 10P FLEXIBLE | JACK FLEXIBLE | MAIN

Ref. No.	Part No.	Description				Remark
		< PILOT LAMP >				
PL801	1-518-553-11	LAMP, PILOT (GREEN)				
PL802	1-518-553-11	LAMP, PILOT (GREEN)				
PL803	1-518-646-11	LAMP, PILOT (AMBER)				
PL804	1-518-646-11	LAMP, PILOT (AMBER)				
		< TRANSISTOR >				
Q801	8-729-904-66	TRANSISTOR DTD113EK				
Q802	8-729-904-66	TRANSISTOR DTD113EK				
Q803	8-729-904-66	TRANSISTOR DTD113EK				
Q804	8-729-904-66	TRANSISTOR DTD113EK				
		< RESISTOR >				
R801	1-216-198-00	METAL CHIP	1K	5%	1/8W	
R802	1-216-090-00	METAL CHIP	51K	5%	1/10W	
R803	1-216-113-00	METAL CHIP	470K	5%	1/10W	
R804	1-216-049-00	METAL CHIP	1K	5%	1/10W	
R805	1-216-184-00	METAL GLAZE	270	5%	1/8W	
R806	1-216-188-00	METAL GLAZE	390	5%	1/8W	
R807	1-216-188-00	METAL GLAZE	390	5%	1/8W	
R808	1-216-184-00	METAL GLAZE	270	5%	1/8W	
R809	1-216-188-00	METAL GLAZE	390	5%	1/8W	
R810	1-216-184-00	METAL GLAZE	270	5%	1/8W	
R811	1-216-182-00	METAL GLAZE	220	5%	1/8W	
R812	1-216-179-00	METAL GLAZE	160	5%	1/8W	
R813	1-216-182-00	METAL GLAZE	220	5%	1/8W	
R814	1-216-179-00	METAL GLAZE	160	5%	1/8W	
R815	1-216-182-00	METAL GLAZE	220	5%	1/8W	
R816	1-216-179-00	METAL GLAZE	160	5%	1/8W	
R817	1-216-182-00	METAL GLAZE	220	5%	1/8W	
R818	1-216-179-00	METAL GLAZE	160	5%	1/8W	
R819	1-216-182-00	METAL GLAZE	220	5%	1/8W	
R820	1-216-179-00	METAL GLAZE	160	5%	1/8W	
R821	1-216-182-00	METAL GLAZE	220	5%	1/8W	
R822	1-216-179-00	METAL GLAZE	160	5%	1/8W	
R823	1-216-198-00	METAL CHIP	1K	5%	1/8W	
R824	1-216-049-00	METAL CHIP	1K	5%	1/10W	
R825	1-216-049-00	METAL CHIP	1K	5%	1/10W	
R826	1-216-049-00	METAL CHIP	1K	5%	1/10W	
R827	1-216-049-00	METAL CHIP	1K	5%	1/10W	
R828	1-216-049-00	METAL CHIP	1K	5%	1/10W	
		< SWITCH >				
S800	1-572-655-11	SWITCH KEYBOARD (OFF)				
S801	1-572-655-11	SWITCH KEYBOARD (FM/AM) (XTC-100/102)				
S801	1-572-655-11	SWITCH KEYBOARD (FM/MW/LW) (XTC-101)				
S802	1-572-655-11	SWITCH KEYBOARD (WALKMAN)				
S803	1-572-655-11	SWITCH KEYBOARD (CD)				
S804	1-572-655-11	SWITCH KEYBOARD (3)				
S805	1-572-655-11	SWITCH KEYBOARD (6/ATA)				
S806	1-572-655-11	SWITCH KEYBOARD (AMS +)				
S807	1-572-655-11	SWITCH KEYBOARD (DISC +)				
S808	1-572-655-11	SWITCH KEYBOARD (2/REPEAT)				
S809	1-572-655-11	SWITCH KEYBOARD (5/SHUF)				
S810	1-572-655-11	SWITCH KEYBOARD (AMS -)				
S811	1-572-655-11	SWITCH KEYBOARD (DISC -)				
S812	1-572-655-11	SWITCH KEYBOARD (1/INTRO)				
S813	1-572-655-11	SWITCH KEYBOARD (4/D. SCAN)				
S814	1-572-655-11	SWITCH KEYBOARD (M. SCAN)				
S815	1-572-655-11	SWITCH KEYBOARD (SENS)				
S816	1-572-655-11	SWITCH KEYBOARD (SELECT +)				
S817	1-572-655-11	SWITCH KEYBOARD (SELECT)				
S818	1-572-655-11	SWITCH KEYBOARD (SELECT -)				
S819	1-572-655-11	SWITCH KEYBOARD (MUTE)				
S820	1-572-655-11	SWITCH KEYBOARD (DSPL)				
S821	1-572-655-11	SWITCH KEYBOARD (ILL)				
S822	1-572-655-11	SWITCH KEYBOARD (LOUD)				
		< VIBLATOR >				
X801	1-579-277-11	VIBLATOR, CERAMIC				

****

1-638-262-11 10P FLEXIBLE BOARD
****

1-580-806-11 CONNECTOR 10P

****

1-638-263-11 JACK FLEXIBLE BOARD
****

1-563-715-11 JACK (WM IN)

****

* A-3222-215-A MAIN BOARD, COMPLETE
****

1-465-786-11 FRONT END, FM

< BUZZER >

BZ501	1-529-078-11	BUZZER, PIEZOELECTRIC			
		< CAPACITOR >			
C501	1-124-257-00	ELECT	2.2uF	20%	50V
C502	1-136-165-00	FILM	0.1uF	5%	50V
C503	1-136-153-00	FILM	0.01uF	5%	50V
C504	1-164-004-11	CERAMIC CHIP	0.1uF	10%	25V

MAIN

Ref. No.	Part No.	Description				Remark
C505	1-163-809-11	CERAMIC CHIP	0.047uF	10%	25V	
C506	1-163-141-00	CERAMIC CHIP	1000PF	5%	50V	
C507	1-163-809-11	CERAMIC CHIP	0.047uF	10%	25V	
C508	1-163-809-11	CERAMIC CHIP	0.047uF	10%	25V	
C509	1-164-004-11	CERAMIC CHIP	0.1uF	10%	25V	
C510	1-164-004-11	CERAMIC CHIP	0.1uF	10%	25V	
C511	1-136-156-00	FILM	0.018uF	5%	50V	(US, Canadian)
C511	1-163-023-00	FILM	0.015uF	5%	50V	(AEP, E, GERMANY)
C512	1-136-156-00	FILM	0.018uF	5%	50V	(US, Canadian)
C512	1-163-023-00	FILM	0.015uF	5%	50V	(AEP, E, GERMANY)
C513	1-124-257-00	ELECT	2.2uF	20%	50V	
C514	1-136-162-00	FILM	0.056uF	5%	50V	
C515	1-136-169-00	FILM	0.22uF	5%	50V	
C516	1-126-163-11	ELECT	4.7uF	20%	50V	
C517	1-136-165-00	FILM	0.1uF	5%	50V	
C518	1-126-301-11	ELECT	1uF	20%	50V	
C519	1-126-159-11	ELECT	0.47uF	20%	50V	
C520	1-163-809-11	CERAMIC CHIP	0.047uF	10%	25V	
C521	1-164-004-11	CERAMIC CHIP	0.1uF	10%	25V	
C522	1-163-037-11	CERAMIC CHIP	0.022uF	10%	25V	
C522			(XTC-100; US, Canadian/XTC-101)			
C523	1-164-161-11	CERAMIC CHIP	2200PF	10%	50V	
C524	1-126-157-11	ELECT	10uF	20%	16V	
C525	1-163-809-11	CERAMIC CHIP	0.047uF	10%	25V	
C527	1-164-004-11	CERAMIC CHIP	0.1uF	10%	25V	
C528	1-136-166-00	FILM	0.12uF	5%	50V	
C529	1-130-467-00	MYLAR	470PF	5%	50V	
C530	1-164-004-11	CERAMIC CHIP	0.1uF	10%	25V	
C531	1-163-235-11	CERAMIC CHIP	22PF	5%	50V	
C532	1-163-103-00	CERAMIC CHIP	27PF	5%	50V	
C534	1-164-004-11	CERAMIC CHIP	0.1uF	10%	25V	
C535	1-164-232-11	CERAMIC CHIP	0.01uF	10%	50V	
C536	1-124-257-00	ELECT	2.2uF	20%	50V	
C537	1-163-037-11	CERAMIC CHIP	0.022uF	10%	25V	
C538	1-124-910-11	ELECT	47uF	20%	50V	
C539	1-163-037-11	CERAMIC CHIP	0.022uF	10%	25V	
C540	1-124-910-11	ELECT	47uF	20%	50V	
C541	1-124-499-11	ELECT, NONPOLAR	1uF	20%	50V	
C542	1-130-471-00	MYLAR	0.001uF	5%	50V	
C543	1-163-251-11	CERAMIC CHIP	100PF	5%	50V	
C544	1-164-004-11	CERAMIC CHIP	0.1uF	10%	25V	
C546	1-163-097-00	CERAMIC CHIP	15PF	5%	50V	
C547	1-163-097-00	CERAMIC CHIP	15PF	5%	50V	
C548	1-136-157-00	FILM	0.022uF	5%	50V	
C549	1-136-153-00	FILM	0.01uF	5%	50V	(AEP)
C550	1-126-162-11	ELECT	3.3uF	20%	50V	
C551	1-126-162-11	ELECT	3.3uF	20%	50V	
C552	1-125-486-11	DUBLE LAYERS	0.22F		5.5V	
C553	1-126-157-11	ELECT	10uF	20%	16V	
C554	1-163-037-11	CERAMIC CHIP	0.022uF	10%	25V	
C555	1-124-584-00	ELECT	100uF	20%	10V	
C556	1-124-584-00	ELECT	100uF	20%	10V	
C557	1-126-157-11	ELECT	10uF	20%	16V	
C558	1-164-004-11	CERAMIC CHIP	0.1uF	10%	25V	
C559	1-163-141-00	CERAMIC CHIP	1000PF	5%	50V	(US, AEP)
C560	1-126-157-11	ELECT	10uF	20%	16V	
C564	1-126-163-11	ELECT	4.7uF	20%	50V	
C565	1-124-584-00	ELECT	100uF	20%	10V	
C566	1-163-037-11	CERAMIC CHIP	0.022uF	10%	25V	
C567	1-124-584-00	ELECT	100uF	20%	10V	
C568	1-124-584-00	ELECT	100uF	20%	10V	
C569	1-126-163-11	ELECT	4.7uF	20%	50V	
C570	1-126-163-11	ELECT	4.7uF	20%	50V	
C580	1-164-232-11	CERAMIC CHIP	0.01uF		50V	
C582	1-164-004-11	CERAMIC CHIP	0.1uF	10%	25V	
C583	1-124-910-11	ELECT	47uF	20%	50V	
C584	1-124-442-00	ELECT	330uF	20%	6.3V	
C586	1-124-584-00	ELECT	100uF	20%	10V	
C587	1-163-037-11	CERAMIC CHIP	0.022uF	10%	25V	
C588	1-163-099-00	CERAMIC CHIP	18PF	5%	50V	
C589	1-163-099-00	CERAMIC CHIP	18PF	5%	50V	
C590	1-164-004-11	CERAMIC CHIP	0.1uF	10%	25V	
C593	1-136-153-00	FILM	0.01uF	5%	50V	
C594	1-164-004-11	CERAMIC CHIP	0.1uF	10%	25V	
C595	1-164-004-11	CERAMIC CHIP	0.1uF	10%	25V	
C596	1-164-161-11	CERAMIC CHIP	2200PF	10%	50V	(AEP)
C596	1-164-232-11	CERAMIC CHIP	0.01uF	10%	50V	
C597	1-126-163-11	ELECT	4.7uF	20%	25V	(AEP)
C598	1-136-175-00	FILM	0.068uF	5%	50V	
C598	1-164-004-11	CERAMIC CHIP	0.1uF	10%	25V	
C599	1-130-471-00	MYLAR	0.001uF	5%	50V	
C601	1-126-159-11	ELECT	0.47uF	20%	50V	
C601			(XTC-100; US, Canadian/XTC-101/102)			
C601	1-126-301-11	ELECT	1.0uF	20%	50V	(XTC-100; AEP, E)
C602	1-124-257-00	ELECT	2.2uF	20%	50V	
C603	1-126-163-11	ELECT	4.7uF	20%	50V	
C604	1-163-161-11	CERAMIC CHIP	2200PF	5%	50V	
C605	1-124-910-11	ELECT	47uF	20%	50V	
C606	1-124-910-11	ELECT	47uF	20%	50V	
C607	1-163-251-11	CERAMIC CHIP	100PF	5%	50V	
C608	1-130-476-00	FILM	0.0027uF	5%	50V	
C609	1-136-162-00	FILM	0.056uF	5%	50V	
C610	1-136-162-00	FILM	0.056uF	5%	50V	
C611	1-130-477-00	FILM	0.0033uF	5%	50V	(AEP)
C612	1-124-464-11	ELECT	0.22uF	20%	50V	
C630	1-124-442-00	ELECT	100uF	20%	10V	
C635	1-126-301-11	ELECT	1uF	20%	50V	

MAIN

Ref. No.	Part No.	Description			Remark
C636	1-126-301-11	ELECT	1uF	20%	50V
C637	1-126-157-11	ELECT	10uF	20%	16V
C638	1-126-157-11	ELECT	10uF	20%	16V
C639	1-126-163-11	ELECT	4.7uF	20%	50V
C640	1-126-163-11	ELECT	4.7uF	20%	50V
C641	1-126-163-11	ELECT	4.7uF	20%	50V
C642	1-126-163-11	ELECT	4.7uF	20%	50V
C643	1-163-123-00	CERAMIC CHIP	180PF	5%	50V (AEP, GERMANY)
C644	1-163-123-00	CERAMIC CHIP	180PF	5%	50V (AEP, GERMANY)
C701	1-126-159-11	ELECT	0.47uF	20%	50V
C701					(XTC-100; US, Canadian/XTC-101/102)
C701	1-126-301-11	ELECT	1.0uF	20%	50V (XTC-100; AEP, E)
C702	1-124-257-00	ELECT	2.2uF	20%	50V
C703	1-126-163-11	ELECT	4.7uF	20%	50V
C704	1-164-161-11	CERAMIC CHIP	2200PF	10%	50V
C705	1-124-910-11	ELECT	47uF	20%	50V
C706	1-124-910-11	ELECT	47uF	20%	50V
C707	1-163-251-11	CERAMIC CHIP	100PF	5%	50V
C708	1-130-476-00	FILM	0.0027uF	5%	50V
C710	1-136-162-00	FILM	0.056uF	5%	50V
C711	1-130-477-00	FILM	0.0033uF	5%	50V
C715	1-124-464-11	ELECT	0.22uF	20%	50V
C730	1-124-584-00	ELECT	100uF	20%	10V
C735	1-126-301-11	ELECT	1uF	20%	50V
C736	1-126-301-11	ELECT	1uF	20%	50V
C737	1-126-157-11	ELECT	10uF	20%	16V
C738	1-126-157-11	ELECT	10uF	20%	16V
C739	1-126-163-11	ELECT	4.7uF	20%	50V
C740	1-126-163-11	ELECT	4.7uF	20%	50V
C741	1-126-163-11	ELECT	4.7uF	20%	50V
C742	1-126-163-11	ELECT	4.7uF	20%	50V
C743	1-163-123-00	CERAMIC CHIP	180PF	5%	50V (AEP, GERMANY)
C744	1-163-123-00	CERAMIC CHIP	180PF	5%	50V (AEP, GERMANY)
C901	1-164-232-11	CERAMIC CHIP	0.01uF		50V
C902	1-164-232-11	CERAMIC CHIP	0.01uF		50V
C903	1-164-232-11	CERAMIC CHIP	0.01uF		50V
C904	1-164-232-11	CERAMIC CHIP	0.01uF		50V
C905	1-164-232-11	CERAMIC CHIP	0.01uF		50V
C906	1-164-232-11	CERAMIC CHIP	0.01uF		50V
C907	1-164-182-11	CERAMIC CHIP	0.0033uF	10%	50V
C908	1-164-182-11	CERAMIC CHIP	0.0033uF	10%	50V
C909	1-163-833-00	CERAMIC CHIP	0.068uF		25V
C910	1-163-833-00	CERAMIC CHIP	0.068uF		25V
C911	1-164-004-11	CERAMIC CHIP	0.1uF	10%	25V
C912	1-164-004-11	CERAMIC CHIP	0.1uF	10%	25V
C913	1-164-004-11	CERAMIC CHIP	0.1uF	10%	25V
C914	1-164-004-11	CERAMIC CHIP	0.1uF	10%	25V
C915	1-164-004-11	CERAMIC CHIP	0.1uF	10%	25V
C916	1-164-004-11	CERAMIC CHIP	0.1uF	10%	25V
C917	1-163-105-00	CERAMIC CHIP	33PF	5%	50V
C918	1-163-141-00	CERAMIC CHIP	0.001uF	5%	50V
C919	1-164-232-11	CERAMIC CHIP	0.01uF		50V
C920	1-164-232-11	CERAMIC CHIP	0.01uF		50V
C921	1-164-232-11	CERAMIC CHIP	0.01uF		50V
C922	1-164-232-11	CERAMIC CHIP	0.01uF		50V
C923	1-164-232-11	CERAMIC CHIP	0.01uF		50V
C931	1-163-077-00	CERAMIC CHIP	0.1uF	10%	25V
C932	1-163-809-11	CERAMIC CHIP	0.047uF	10%	25V
C933	1-163-809-11	CERAMIC CHIP	0.047uF	10%	25V
C934	1-164-004-11	CERAMIC CHIP	0.1uF	10%	25V (GERMANY)
C935	1-126-163-11	ELECT	4.7uF	20%	50V
C936	1-163-833-00	CERAMIC CHIP	0.068uF		25V
C937	1-163-833-00	CERAMIC CHIP	0.068uF		25V
C938	1-164-004-11	CERAMIC CHIP	0.1uF	10%	25V
C940	1-164-182-11	CERAMIC CHIP	0.0033uF	10%	50V
C940					(XTC-100/102)
C941	1-163-833-00	CERAMIC CHIP	0.068uF		25V
C942	1-163-037-11	CERAMIC CHIP	0.022uF	10%	25V
C943	1-163-245-11	CERAMIC CHIP	56PF	5%	50V
C944	1-163-833-00	CERAMIC CHIP	0.068uF		25V
C945	1-164-004-11	CERAMIC CHIP	0.1uF	10%	25V

< FILTER >

CF101	1-567-415-11	FILTER, CERAMIC
CF102	1-567-415-11	FILTER, CERAMIC

< CONNECTOR HOUSING >

CNJ2	1-573-508-11	HOUSING, CONNECTOR 5P
CNJ3	1-573-507-11	HOUSING, CONNECTOR 8P

< CONNECTOR PIN >

CNP1	* 1-506-984-11	PIN, CONNECTOR (PC BOARD) 2P
CNP2	* 1-506-987-11	PIN, CONNECTOR (PC BOARD) 5P
CNP3	* 1-506-988-11	PIN, CONNECTOR (PC BOARD) 6P
CNP4	* 1-506-989-11	PIN, CONNECTOR (PC BOARD) 7P
CNP5	* 1-506-990-11	PIN, CONNECTOR (PC BOARD) 8P

< DIODE >

D501	8-719-800-76	DIODE	1SS226 (XTC-100/102)
D502	8-719-977-03	DIODE	DTZ5.6B
D503	8-719-404-49	DIODE	MA111
D504	8-719-800-76	DIODE	1SS226
D505	8-719-800-76	DIODE	1SS226 (XTC-100/102)
D506	8-719-404-49	DIODE	MA111
D507	8-719-404-49	DIODE	MA111
D508	8-719-978-69	DIODE	DTZ16B
D509	8-719-400-18	DIODE	MA152WK
D510	8-719-404-49	DIODE	MA111

MAIN

Ref. No.	Part No.	Description	Remark
D511	8-719-977-07	DIODE DTZ6.2B	
D513	8-719-404-49	DIODE MA111	
D516	8-719-977-07	DIODE DTZ6.2B	
D517	8-719-976-88	DIODE DTZ3.9B	
D518	8-719-976-88	DIODE DTZ3.9B	
D519	8-719-976-88	DIODE DTZ3.9B	
D520	8-719-976-88	DIODE DTZ3.9B	
D521	8-719-404-49	DIODE MA111	
D525	8-719-978-30	DIODE DTZ6.2C	
D527	8-719-977-24	DIODE DTZ9.1B	
D529	8-719-104-34	DIODE 1S2836	
D531	8-719-977-03	DIODE DTZ5.6B	
D534	8-719-976-91	DIODE DTZ4.3B	
D536	8-719-976-91	DIODE DTZ4.3B	
D537	8-719-977-24	DIODE DTZ9.1B	
D539	8-719-800-76	DIODE 1SS226 (XTC-100/101)	
D541	8-719-404-49	DIODE MA111	
D544	8-719-977-07	DIODE DTZ6.2B	
D545	8-719-977-07	DIODE DTZ6.2B	
D546	8-719-977-07	DIODE DTZ6.2B	
D547	8-719-977-07	DIODE DTZ6.2B	
D548	8-719-977-07	DIODE DTZ6.2B	
D549	8-719-977-07	DIODE DTZ6.2B	
D550	8-719-977-07	DIODE DTZ6.2B	
D551	8-719-977-07	DIODE DTZ6.2B	
D552	8-719-977-07	DIODE DTZ6.2B	
D553	8-719-977-07	DIODE DTZ6.2B	
D554	8-719-200-02	DIODE 10E2	
D555	8-719-977-07	DIODE DTZ6.2B	
D556	8-719-976-91	DIODE DTZ4.3B	
D557	8-719-976-91	DIODE DTZ4.3B	
D601	8-719-976-91	DIODE DTZ4.3B	
D701	8-719-976-91	DIODE DTZ4.3B	
		< FILTER >	
FL1	1-459-123-00	COIL, DUST CORE (PAC)	
		< TRANSFORMER >	
FL501	1-404-955-11	TRANSFORMER, IF (IFT COIL)	
		< IC >	
IC501	8-759-153-95	IC uPD-75516GF-248-3B9	
IC502	8-759-246-22	IC TA8172AF	
IC503	8-759-820-91	IC LC7218	
IC504	8-759-932-86	IC BU4081BF	
IC505	8-759-940-45	IC S-8054HN-CB	
IC506	8-759-982-10	IC NJM7809FA	
IC507	8-759-932-64	IC BU4052BF	
IC508	8-759-631-00	IC M5280FP	
IC509	8-759-631-00	IC M5280FP	
IC512	8-759-932-67	IC BU4053B1	
IC514	8-759-820-15	IC LC7537AN	
IC517	8-759-998-24	IC TDA1579T (XTC-102)	
IC518	8-759-909-71	IC BA4558F (XTC-101/102)	
IC519	8-759-909-71	IC BA4558F	
IC520	8-759-909-71	IC BA4558F	
IC521	8-759-909-71	IC BA4558F	
IC522	8-759-909-71	IC BA4558F	
IC523	8-759-631-00	IC M5280FP	
IC524	8-759-631-00	IC M5280FP	
IC601	8-759-909-71	IC BA4558F	
IC602	8-759-909-71	IC BA4558F	
IC701	8-759-909-71	IC BA4558F	
IC702	8-759-909-71	IC BA4558F	
		< JUMPER RESISTOR >	
JR1	1-216-296-00	METAL CHIP 0 5% 1/8W	
JR2	1-216-296-00	METAL CHIP 0 5% 1/8W	
JR3	1-216-296-00	METAL CHIP 0 5% 1/8W	
JR4	1-216-296-00	METAL CHIP 0 5% 1/8W	
JR5	1-216-296-00	METAL CHIP 0 5% 1/8W	
JR6	1-216-296-00	METAL CHIP 0 5% 1/8W	
JR7	1-216-296-00	METAL CHIP 0 5% 1/8W	
JR8	1-216-296-00	METAL CHIP 0 5% 1/8W	
JR9	1-216-296-00	METAL CHIP 0 5% 1/8W	
JR10	1-216-296-00	METAL CHIP 0 5% 1/8W	
JR11	1-216-296-00	METAL CHIP 0 5% 1/8W	
JR12	1-216-296-00	METAL CHIP 0 5% 1/8W	
JR13	1-216-296-00	METAL CHIP 0 5% 1/8W	
JR14	1-216-296-00	METAL CHIP 0 5% 1/8W	
JR15	1-216-296-00	METAL CHIP 0 5% 1/8W	
JR16	1-216-296-00	METAL CHIP 0 5% 1/8W	
JR17	1-216-296-00	METAL CHIP 0 5% 1/8W	
JR18	1-216-296-00	METAL CHIP 0 5% 1/8W	
JR19	1-216-296-00	METAL CHIP 0 5% 1/8W	
JR20	1-216-296-00	METAL CHIP 0 5% 1/8W	
JR21	1-216-296-00	METAL CHIP 0 5% 1/8W	
JR22	1-216-295-00	METAL CHIP 0 5% 1/10W	
JR23	1-216-295-00	METAL CHIP 0 5% 1/10W	
JR24	1-216-295-00	METAL CHIP 0 5% 1/10W	
JR25	1-216-295-00	METAL CHIP 0 5% 1/10W	
JR26	1-216-295-00	METAL CHIP 0 5% 1/10W	
JR27	1-216-295-00	METAL CHIP 0 5% 1/10W	
JR28	1-216-296-00	METAL CHIP 0 5% 1/8W	
JR29	1-216-296-00	METAL CHIP 0 5% 1/8W	
JR30	1-216-296-00	METAL CHIP 0 5% 1/8W	

MAIN

Ref. No.	Part No.	Description				Remark
JR31	1-216-296-00	METAL CHIP	0	5%	1/8W	
JR32	1-216-296-00	METAL CHIP	0	5%	1/8W	
JR33	1-216-296-00	METAL CHIP	0	5%	1/8W	
JR34	1-216-296-00	METAL CHIP	0	5%	1/8W	
JR35	1-216-296-00	METAL CHIP	0	5%	1/8W	
JR36	1-216-296-00	METAL CHIP	0	5%	1/8W	
JR37	1-216-296-00	METAL CHIP	0	5%	1/8W	
JR38	1-216-296-00	METAL CHIP	0	5%	1/8W	
JR39	1-216-296-00	METAL CHIP	0	5%	1/8W	
JR40	1-216-296-00	METAL CHIP	0	5%	1/8W	
JR41	1-216-295-00	METAL CHIP	0	5%	1/10W	
JR42	1-216-295-00	METAL CHIP	0	5%	1/10W	
JR43	1-216-295-00	METAL CHIP	0	5%	1/10W	
JR44	1-216-295-00	METAL CHIP	0	5%	1/10W	
JR45	1-216-295-00	METAL CHIP	0	5%	1/10W	
JR46	1-216-295-00	METAL CHIP	0	5%	1/10W	
JR47	1-216-295-00	METAL CHIP	0	5%	1/10W	
JR48	1-216-295-00	METAL CHIP	0	5%	1/10W	
JR49	1-216-295-00	METAL CHIP	0	5%	1/10W	
JR50	1-216-295-00	METAL CHIP	0	5%	1/10W	
JR51	1-216-295-00	METAL CHIP	0	5%	1/10W	
JR52	1-216-295-00	METAL CHIP	0	5%	1/10W	
JR53	1-216-295-00	METAL CHIP	0	5%	1/10W	
JR54	1-216-295-00	METAL CHIP	0	5%	1/10W	

< COIL >

L501	1-410-204-31	INDUCTOR CHIP	10uH
L502	1-410-389-31	INDUCTOR CHIP	47uH
L503	1-408-798-00	INDUCTOR CHIP	1mH
L504	1-410-385-11	INDUCTOR CHIP	22uH
L505	1-410-198-51	INDUCTOR CHIP	3.3uH
L506	1-410-208-41	INDUCTOR CHIP	22uH
L507	1-410-381-11	INDUCTOR CHIP	10uH
L508	1-410-196-11	INDUCTOR CHIP	2.2uH
L509	1-410-198-51	INDUCTOR CHIP	3.3uH

< TRANSISTOR >

Q5	8-729-120-28	TRANSISTOR	2SC2412K-R
Q501	8-729-901-00	TRANSISTOR	DTC124EK
Q502	8-729-901-00	TRANSISTOR	DTC124EK
Q503	8-729-120-28	TRANSISTOR	2SC2412K-R
Q504	8-729-120-28	TRANSISTOR	2SC2412K-R
Q505	8-729-120-28	TRANSISTOR	2SC2412K-R
Q506	8-729-106-60	TRANSISTOR	2SB1115A
Q507	8-729-106-60	TRANSISTOR	2SB1115A
Q508	8-729-120-28	TRANSISTOR	2SC2412K-R
Q509	8-729-120-28	TRANSISTOR	2SC2412K-R
Q510	8-729-901-00	TRANSISTOR	DTC124EK
Q511	8-729-216-22	TRANSISTOR	2SA1162
Q512	8-729-900-53	TRANSISTOR	DTC114EK
Q513	8-729-120-28	TRANSISTOR	2SC2412K-R
Q514	8-729-901-01	TRANSISTOR	DTC144EK
Q515	8-729-120-28	TRANSISTOR	2SC2412K-R
Q516	8-729-901-01	TRANSISTOR	DTC144EK
Q517	8-729-106-60	TRANSISTOR	2SB1115A
Q518	8-729-901-00	TRANSISTOR	DTC124EK
Q519	8-729-901-05	TRANSISTOR	DTA124EK
Q520	8-729-901-00	TRANSISTOR	DTC124EK
Q521	8-729-920-21	TRANSISTOR	DTC314TK-H04
Q522	8-729-920-21	TRANSISTOR	DTC314TK-H04
Q523	8-729-920-21	TRANSISTOR	DTC314TK-H04
Q524	8-729-920-21	TRANSISTOR	DTC314TK-H04
Q525	8-729-120-28	TRANSISTOR	2SC2412K-R
Q526	8-729-920-85	TRANSISTOR	2SD1664-QR
Q527	8-729-922-51	TRANSISTOR	2SB1184-F5-R
Q528	8-729-901-00	TRANSISTOR	DTC124EK
Q529	8-729-920-85	TRANSISTOR	2SD1664-QR
Q530	8-729-922-51	TRANSISTOR	2SB1184-F5-R
Q531	8-729-901-00	TRANSISTOR	DTC124EK
Q532	8-729-921-48	TRANSISTOR	2SD1760-F5-Q
Q533	8-729-901-01	TRANSISTOR	DTC144EK
Q535	8-729-901-01	TRANSISTOR	DTC144EK
Q536	8-729-901-00	TRANSISTOR	DTC124EK
Q537	8-729-901-04	TRANSISTOR	DTA114EK (XTC-100/101)
Q538	8-729-901-04	TRANSISTOR	DTA114EK (XTC-100/101)
Q539	8-729-120-28	TRANSISTOR	2SC2412K-R (XTC-102)
Q540	8-729-120-28	TRANSISTOR	2SC2412K-R (XTC-102)
Q543	8-729-304-13	TRANSISTOR	2SK360D
Q544	8-729-901-01	TRANSISTOR	DTC144EK
Q550	8-729-901-05	TRANSISTOR	DTA124EK

< RESISTOR >

R1	1-216-105-00	METAL CHIP	220K	5%	1/10W
R2	1-216-105-00	METAL CHIP	220K	5%	1/10W
R3	1-216-214-00	METAL GLAZE	4.7K	5%	1/8W
R4	1-216-065-00	METAL CHIP	4.7K	5%	1/10W
R5	1-216-065-00	METAL CHIP	4.7K	5%	1/10W
R6	1-216-073-00	METAL CHIP	10K	5%	1/10W
R7	1-216-041-00	METAL CHIP	470	5%	1/10W
R8	1-216-113-00	METAL CHIP	470K	5%	1/10W
R9	1-216-049-00	METAL CHIP	1K	5%	1/10W
R10	1-216-049-00	METAL CHIP	1K	5%	1/10W
R11	1-216-049-00	METAL CHIP	1K	5%	1/10W
R12	1-216-049-00	METAL CHIP	1K	5%	1/10W
R13	1-216-049-00	METAL CHIP	1K	5%	1/10W
R14	1-216-073-00	METAL CHIP	10K	5%	1/10W
R15	1-216-049-00	METAL CHIP	1K	5%	1/10W

MAIN

Ref. No.	Part No.	Description				Remark
R16	1-216-049-00	METAL CHIP	1K	5%	1/10W	
R17	1-216-073-00	METAL CHIP	10K	5%	1/10W	
R18	1-216-049-00	METAL CHIP	1K	5%	1/10W	
R19	1-216-049-00	METAL CHIP	1K	5%	1/10W	
R20	1-216-049-00	METAL CHIP	1K	5%	1/10W	
R22	1-216-097-00	METAL GLAZE	100K	5%	1/10W	
R23	1-216-089-00	METAL GLAZE	47K	5%	1/10W	
R27	1-216-073-00	METAL GLAZE	10K	5%	1/10W	
R28	1-216-089-00	METAL GLAZE	47K	5%	1/10W	
R29	1-216-073-00	METAL GLAZE	10K	5%	1/10W	
R30	1-216-097-00	METAL GLAZE	100K	5%	1/10W	
R33	1-216-202-00	METAL GLAZE	1.5K		1/8W	
R501	1-216-061-00	METAL CHIP	3.3K	5%	1/10W	
R502	1-216-049-00	METAL CHIP	1K	5%	1/10W	
R503	1-216-214-00	METAL GLAZE	4.7K	5%	1/8W	
R504	1-216-049-00	METAL CHIP	1K	5%	1/10W	
R505	1-216-065-00	METAL CHIP	4.7K	5%	1/10W	
R506	1-216-037-00	METAL CHIP	330	5%	1/10W	
R507	1-216-065-00	METAL CHIP	4.7K	5%	1/10W	
R508	1-216-061-00	METAL CHIP	3.3K	5%	1/10W	
R509	1-216-061-00	METAL CHIP	3.3K	5%	1/10W	
R510	1-216-065-00	METAL CHIP	4.7K	5%	1/10W	
R511	1-216-071-00	METAL CHIP	8.2K	5%	1/10W	
R512	1-216-075-00	METAL CHIP	12K	5%	1/10W	
R513	1-216-069-00	METAL CHIP	6.8K	5%	1/10W	
R514	1-216-017-00	METAL CHIP	47	5%	1/10W	
R515	1-216-105-00	METAL CHIP	220K	5%	1/10W	
R516	1-216-073-00	METAL CHIP	10K	5%	1/10W	
R517	1-216-073-00	METAL CHIP	10K	5%	1/10W	
R518	1-216-073-00	METAL CHIP	10K	5%	1/10W	
R519	1-216-224-00	METAL GLAZE	12K	5%	1/8W	
R520	1-216-057-00	METAL CHIP	2.2K	5%	1/10W	
R521	1-216-053-00	METAL CHIP	1.5K	5%	1/10W	
R522	1-216-046-00	METAL CHIP	750	5%	1/10W	
R523	1-216-220-00	METAL GLAZE	8.2K	5%	1/8W	
R524	1-216-055-00	METAL GLAZE	1.8K	5%	1/10W	
R525	1-216-049-00	METAL CHIP	1K	5%	1/10W	
R526	1-216-073-00	METAL CHIP	10K	5%	1/10W	
R527	1-216-059-00	METAL CHIP	2.7K	5%	1/10W	
R528	1-216-059-00	METAL CHIP	2.7K	5%	1/10W	
R529	1-216-061-00	METAL CHIP	3.3K	5%	1/10W	
R530	1-216-065-00	METAL CHIP	4.7K	5%	1/10W	
R531	1-216-063-00	METAL CHIP	3.9K	5%	1/10W	
R532	1-216-198-00	METAL CHIP	1K	5%	1/8W	
R533	1-216-049-00	METAL CHIP	1K	5%	1/10W	
R534	1-216-073-00	METAL CHIP	10K	5%	1/10W	
R535	1-216-081-00	METAL GLAZE	22K	5%	1/10W	(US, Canadian)
R535	1-216-091-00	METAL GLAZE	56K	5%	1/10W	(GERMANY)
R535	1-216-748-11	METAL GLAZE	39K	5%	1/10W	(AEP, E)

Ref. No.	Part No.	Description				Remark
R536	1-216-073-00	METAL CHIP	10K	5%	1/10W	
R537	1-216-073-00	METAL CHIP	10K	5%	1/10W	
R538	1-216-166-00	METAL GLAZE	47	5%	1/8W	
R539	1-216-073-00	METAL CHIP	10K	5%	1/10W	
R540	1-216-073-00	METAL CHIP	10K	5%	1/10W	
R541	1-216-073-00	METAL CHIP	10K	5%	1/10W	
R542	1-216-105-00	METAL CHIP	220K	5%	1/10W	
R543	1-216-081-00	METAL CHIP	22K	5%	1/10W	
R544	1-216-085-00	METAL GLAZE	33K	5%	1/10W	
R545	1-216-097-00	METAL CHIP	100K	5%	1/10W	
R546	1-216-254-00	METAL GLAZE	220K	5%	1/8W	
R547	1-216-055-00	METAL CHIP	1.8K	5%	1/10W	
R549	1-216-049-00	METAL GLAZE	1K	5%	1/10W	
R550	1-216-246-00	METAL GLAZE	100K	5%	1/8W	
R551	1-216-105-00	METAL CHIP	220K	5%	1/10W	
R552	1-216-081-00	METAL CHIP	22K	5%	1/10W	
R553	1-216-105-00	METAL CHIP	220K	5%	1/10W	
R554	1-216-073-00	METAL CHIP	10K	5%	1/10W	
R555	1-216-057-00	METAL CHIP	2.2K	5%	1/10W	
R556	1-216-057-00	METAL CHIP	2.2K	5%	1/10W	
R557	1-216-035-00	METAL CHIP	270	5%	1/10W	
R558	1-216-073-00	METAL CHIP	10K	5%	1/10W	
R559	1-216-222-00	METAL GLAZE	10K	5%	1/8W	
R560	1-216-073-00	METAL CHIP	10K	5%	1/10W	
R561	1-216-073-00	METAL CHIP	10K	5%	1/10W	
R562	1-216-057-00	METAL CHIP	2.2K	5%	1/10W	
R563	1-216-057-00	METAL CHIP	2.2K	5%	1/10W	
R564	1-216-045-00	METAL CHIP	680	5%	1/10W	
R565	1-216-045-00	METAL CHIP	680	5%	1/10W	
R566	1-216-073-00	METAL CHIP	10K	5%	1/10W	
R567	1-216-057-00	METAL CHIP	2.2K	5%	1/10W	
R568	1-216-057-00	METAL CHIP	2.2K	5%	1/10W	
R569	1-216-049-00	METAL CHIP	1K	5%	1/10W	
R570	1-216-061-00	METAL CHIP	3.3K	5%	1/10W	
R571	1-216-051-00	METAL CHIP	1.2K	5%	1/10W	
R572	1-216-097-00	METAL CHIP	100K	5%	1/10W	
R573	1-216-089-00	METAL CHIP	47K	5%	1/10W	
R574	1-216-049-00	METAL GLAZE	1K	5%	1/10W	
R575	1-216-097-00	METAL GLAZE	100K	5%	1/10W	
R576	1-216-089-00	METAL GLAZE	47K	5%	1/10W	
R577	1-216-049-00	METAL CHIP	1K	5%	1/10W	
R578	1-216-073-00	METAL CHIP	10K	5%	1/10W	
R579	1-216-049-00	METAL GLAZE	1K	5%	1/10W	
R580	1-216-073-00	METAL CHIP	10K	5%	1/10W	
R581	1-216-222-00	METAL GLAZE	10K	5%	1/8W	
R582	1-216-053-00	METAL CHIP	1.5K	5%	1/10W	
R583	1-216-073-00	METAL CHIP	10K	5%	1/10W	
R584	1-216-053-00	METAL CHIP	1.5K	5%	1/10W	
R585	1-216-073-00	METAL CHIP	10K	5%	1/10W	

MAIN

Ref. No.	Part No.	Description				Remark
R586	1-216-059-00	METAL CHIP	2.7K	5%	1/10W	
R587	1-216-222-00	METAL GLAZE	10K	5%	1/8W	
R588	1-216-053-00	METAL CHIP	1.5K	5%	1/10W	
R589	1-216-184-00	METAL GLAZE	270	5%	1/8W	
R590	1-216-065-00	METAL CHIP	4.7K	5%	1/10W	
R591	1-216-105-00	METAL CHIP	220K	5%	1/10W	
R591	1-216-246-00	METAL GLAZE	100K	5%	1/8W	
R592	1-216-049-00	METAL CHIP	1K	5%	1/10W	
R592	1-216-246-00	METAL GLAZE	100K	5%	1/8W	
R593	1-216-041-00	METAL CHIP	470	5%	1/10W	
R594	1-216-073-00	METAL CHIP	10K	5%	1/10W	
R595	1-216-097-00	METAL CHIP	100K	5%	1/10W	
R596	1-216-073-00	METAL CHIP	10K	5%	1/10W	
R597	1-216-073-00	METAL CHIP	10K	5%	1/10W	
R598	1-216-073-00	METAL CHIP	10K	5%	1/10W	
R599	1-216-057-00	METAL CHIP	2.2K	5%	1/10W	
R602	1-216-121-00	METAL CHIP	1M	5%	1/10W	
R603	1-216-073-00	METAL CHIP	10K	5%	1/10W	
R604	1-216-065-00	METAL CHIP	4.7K	5%	1/10W	(AEP, E)
R604	1-216-075-00	METAL CHIP	12K	5%	1/10W	(GERMANY)
R604	1-216-295-00	METAL CHIP	0	5%	1/10W	(US, Canadian)
R605	1-216-057-00	METAL GLAZE	2.2K	5%	1/10W	
R606	1-216-081-00	METAL CHIP	22K	5%	1/10W	
R607	1-216-025-00	METAL CHIP	100	5%	1/10W	
R611	1-216-061-00	METAL CHIP	3.3K	5%	1/10W	
R612	1-216-077-00	METAL CHIP	15K	5%	1/10W	
R613	1-216-121-00	METAL CHIP	1M	5%	1/10W	
R614	1-216-121-00	METAL CHIP	1M	5%	1/10W	
R620	1-216-079-00	METAL CHIP	18K	5%	1/10W	
R621	1-216-073-00	METAL CHIP	10K	5%	1/10W	
R622	1-216-121-00	METAL CHIP	1M	5%	1/10W	
R630	1-216-041-00	METAL CHIP	470	5%	1/10W	
R631	1-216-083-00	METAL CHIP	27K	5%	1/10W	
R632	1-216-073-00	METAL CHIP	10K	5%	1/10W	
R633	1-216-083-00	METAL CHIP	27K	5%	1/10W	
R634	1-216-073-00	METAL CHIP	10K	5%	1/10W	
R636	1-216-073-00	METAL CHIP	10K	5%	1/10W	
R637	1-216-057-00	METAL CHIP	2.2K	5%	1/10W	
R638	1-216-121-00	METAL CHIP	1M	5%	1/10W	
R639	1-216-121-00	METAL CHIP	1M	5%	1/10W	
R640	1-216-073-00	METAL CHIP	10K	5%	1/10W	
R641	1-216-057-00	METAL CHIP	2.2K	5%	1/10W	
R702	1-216-121-00	METAL CHIP	1M	5%	1/10W	
R703	1-216-073-00	METAL CHIP	10K	5%	1/10W	
R704	1-216-065-00	METAL CHIP	4.7K	5%	1/10W	(AEP, E)
R704	1-216-075-00	METAL CHIP	12K	5%	1/10W	(GERMANY)
R704	1-216-295-00	METAL CHIP	0	5%	1/10W	(US, Canadian)
R705	1-216-057-00	METAL GLAZE	2.2K	5%	1/10W	
R706	1-216-081-00	METAL CHIP	22K	5%	1/10W	
R707	1-216-025-00	METAL CHIP	100	5%	1/10W	
R711	1-216-061-00	METAL CHIP	3.3K	5%	1/10W	
R712	1-216-226-00	METAL GLAZE	15K	5%	1/8W	
R713	1-216-121-00	METAL CHIP	1M	5%	1/10W	
R714	1-216-121-00	METAL CHIP	1M	5%	1/10W	
R720	1-216-079-00	METAL CHIP	18K	5%	1/10W	
R721	1-216-073-00	METAL CHIP	10K	5%	1/10W	
R722	1-216-121-00	METAL CHIP	1M	5%	1/10W	
R730	1-216-041-00	METAL CHIP	470	5%	1/10W	
R731	1-216-083-00	METAL CHIP	27K	5%	1/10W	
R732	1-216-073-00	METAL CHIP	10K	5%	1/10W	
R733	1-216-083-00	METAL CHIP	27K	5%	1/10W	
R734	1-216-073-00	METAL CHIP	10K	5%	1/10W	
R736	1-216-073-00	METAL CHIP	10K	5%	1/10W	
R737	1-216-057-00	METAL CHIP	2.2K	5%	1/10W	
R738	1-216-121-00	METAL CHIP	1M	5%	1/10W	
R739	1-216-121-00	METAL CHIP	1M	5%	1/10W	
R740	1-216-073-00	METAL CHIP	10K	5%	1/10W	
R741	1-216-057-00	METAL CHIP	2.2K	5%	1/10W	
R901	1-216-073-00	METAL CHIP	10K	5%	1/10W	
R902	1-216-073-00	METAL CHIP	10K	5%	1/10W	
R903	1-216-065-00	METAL CHIP	4.7K	5%	1/10W	
R904	1-216-065-00	METAL CHIP	4.7K	5%	1/10W	
R905	1-216-017-00	METAL CHIP	47	5%	1/10W	
R906	1-216-017-00	METAL CHIP	47	5%	1/10W	
R907	1-216-105-00	METAL CHIP	220K	5%	1/10W	
R908	1-216-105-00	METAL CHIP	220K	5%	1/10W	
R909	1-216-222-00	METAL GLAZE	10K	5%	1/8W	
R910	1-216-073-00	METAL CHIP	10K	5%	1/10W	
R911	1-216-073-00	METAL CHIP	10K	5%	1/10W	
R912	1-216-073-00	METAL CHIP	10K	5%	1/10W	
R913	1-216-073-00	METAL CHIP	10K	5%	1/10W	
R914	1-216-073-00	METAL CHIP	10K	5%	1/10W	
R915	1-216-057-00	METAL CHIP	2.2K	5%	1/10W	
R916	1-216-061-00	METAL GLAZE	3.3K	5%	1/10W	(GERMANY)
R918	1-216-045-00	METAL CHIP	680	5%	1/10W	
R930	1-216-067-00	METAL CHIP	5.6K	5%	1/10W	
R931	1-216-067-00	METAL CHIP	5.6K	5%	1/10W	
R932	1-216-116-00	METAL GLAZE	620K	5%	1/10W	
R933	1-216-089-00	METAL CHIP	47K	5%	1/10W	
R934	1-216-071-00	METAL CHIP	8.2K	5%	1/10W	
R936	1-216-093-00	METAL CHIP	68K	5%	1/10W	
R937	1-216-041-00	METAL CHIP	470	5%	1/10W	
R938	1-216-065-00	METAL CHIP	4.7K	5%	1/10W	
R939	1-216-097-00	METAL CHIP	100K	5%	1/10W	
R940	1-216-117-00	METAL CHIP	680K	5%	1/10W	
R941	1-216-106-00	METAL CHIP	240K	5%	1/10W	
R942	1-216-075-00	METAL CHIP	12K	5%	1/10W	

MAIN POWER

Ref. No.	Part No.	Description				Remark
R943	1-216-222-00	METAL GLAZE	10K	5%	1/8W	
R944	1-216-089-00	METAL CHIP	47K	5%	1/10W	
R945	1-216-075-00	METAL CHIP	12K	5%	1/10W	
R946	1-216-105-00	METAL CHIP	220K	5%	1/10W	
R947	1-216-085-00	METAL CHIP	33K	5%	1/10W	
R948	1-216-089-00	METAL CHIP	47K	5%	1/10W	
R949	1-216-089-00	METAL CHIP	47K	5%	1/10W	
R976	1-216-105-00	METAL GLAZE	220K	5%	1/10W	(GERMANY)
R989	1-216-037-00	METAL CHIP	330	5%	1/10W	
		< VARIABLE RESISTOR >				
RV501	1-238-601-11	RES, ADJ, CARBON 22K				
RV502	1-238-600-11	RES, ADJ, CARBON 10K				
		< SWITCH >				
SW1	1-553-510-00	SWITCH, SLIDE				
SW2	1-553-510-00	SWITCH, SLIDE(10K ↔ 9K) (XTC-100;E, AEP)				
SW4	1-553-510-00	SWITCH, SLIDE (ACC ⟷ NONACC)				
SW5	1-571-532-21	SWITCH, TACTIL (RESET)				
SW6	1-571-754-11	SWITCH, PUSH (1 KEY) (POWER)				
		< THERMISTOR >				
TH501	1-809-148-11	THERMISTOR, POSITIVE				
TH502	1-809-148-11	THERMISTOR, POSITIVE				
		< TUNER >				
TU101	1-465-688-11	TUNER UNIT (AM) (XTC-100/102)				
TU101	1-465-689-11	TUNER UNIT (MW/LW) (XTC-101)				
		< CRYSTAL >				
X501	1-578-779-21	VIBLATOR, CERAMIC				
X502	1-567-848-11	VIBRATOR, CRYSTAL (7.2M)				
X503	1-567-821-11	VIBRATOR, CRYSTAL (4.19M)				

****

* A-3222-218-A POWER BOARD, COMPLETE

****

	1-574-339-11	CORD (WITH CONNECTOR)				
	1-580-860-11	CONNECTOR				
	1-590-477-11	CORD (WITH CONNECTOR)				
	1-590-512-11	CORD (WITH CONNECTOR)				
*	3-366-179-01	HEAT SINK (B)				
	7-685-135-19	SCREW +P 2.6X10 TYPE2 NON-SLIT				
	7-621-770-67	SCREW +PTT 2.6X6 (S)				
		< CAPACITOR >				
C107	1-163-251-11	CERAMIC CHIP	100PF	5%	50V	
C112	1-126-335-11	ELECT	220uF	20%	10V	
C113	1-126-335-11	ELECT	220uF	20%	10V	
C114	1-136-165-00	FILM	0.1uF	5%	50V	
C115	1-136-165-00	FILM	0.1uF	5%	50V	
C207	1-163-251-11	CERAMIC CHIP	100PF	5%	50V	
C212	1-126-335-11	ELECT	220uF	20%	10V	
C213	1-126-335-11	ELECT	220uF	20%	10V	
C214	1-136-165-00	FILM	0.1uF	5%	50V	
C215	1-136-165-00	FILM	0.1uF	5%	50V	
C216	1-128-268-11	ELECT	3300uF	20%	16V	
C306	1-163-809-11	CERAMIC CHIP	0.047uF	10%	25V	
C307	1-163-251-11	CERAMIC CHIP	100PF	5%	50V	
C312	1-126-335-11	ELECT	220uF	20%	10V	
C313	1-126-335-11	ELECT	220uF	20%	10V	
C314	1-136-165-00	FILM	0.1uF	5%	50V	
C315	1-136-165-00	FILM	0.1uF	5%	50V	
C407	1-163-251-11	CERAMIC CHIP	100PF	5%	50V	
C412	1-126-335-11	ELECT	220uF	20%	10V	
C413	1-126-335-11	ELECT	220uF	20%	10V	
C414	1-136-165-00	FILM	0.1uF	5%	50V	
C415	1-136-165-00	FILM	0.1uF	5%	50V	
C416	1-128-268-11	ELECT	3300uF	20%	16V	
		< CONNECTOR >				
CN103	1-506-491-11	CONNECTOR 12P, MALE				
		< DIODE >				
D101	8-719-313-74	DIODE	SFPB-52V			
D102	8-719-313-74	DIODE	SFPB-52V			
D103	8-719-110-59	DIODE	RD22ES-T1B4			
D201	8-719-313-74	DIODE	SFPB-52V			
D202	8-719-313-74	DIODE	SFPB-52V			
D301	8-719-313-74	DIODE	SFPB-52V			
D302	8-719-313-74	DIODE	SFPB-52V			
D401	8-719-313-74	DIODE	SFPB-52V			
D402	8-719-313-74	DIODE	SFPB-52V			
D561	8-719-945-59	DIODE	DSA3A4			
		< IC >				
IC101	8-759-147-25	IC	uPC2500H			
IC201	8-759-147-25	IC	uPC2500H			
IC301	8-759-147-25	IC	uPC2500H			
IC401	8-759-147-25	IC	uPC2500H			
		< RESISTOR >				
R105	1-216-067-00	METAL CHIP	5.6K	5%	1/10W	
R106	1-216-053-00	METAL CHIP	1.5K	5%	1/10W	
R111	1-216-009-00	METAL CHIP	22	5%	1/10W	
R112	1-216-009-00	METAL CHIP	22	5%	1/10W	
R113	1-216-049-00	METAL CHIP	1K	5%	1/10W	
R114	1-216-049-00	METAL CHIP	1K	5%	1/10W	
R115	1-216-049-00	METAL CHIP	1K	5%	1/10W	
R116	1-217-806-11	METAL GLAZE	1	5%	1/8W	
R117	1-217-806-11	METAL GLAZE	1	5%	1/8W	
R205	1-216-067-00	METAL CHIP	5.6K	5%	1/10W	
R206	1-216-053-00	METAL CHIP	1.5K	5%	1/10W	
R211	1-216-009-00	METAL CHIP	22	5%	1/10W	
R212	1-216-009-00	METAL CHIP	22	5%	1/10W	
R213	1-216-049-00	METAL CHIP	1K	5%	1/10W	
R214	1-216-049-00	METAL CHIP	1K	5%	1/10W	
R215	1-216-049-00	METAL CHIP	1K	5%	1/10W	
R216	1-217-806-11	METAL GLAZE	1	5%	1/8W	
R217	1-217-806-11	METAL GLAZE	1	5%	1/8W	

POWER

Ref. No.	Part No.	Description				Remark
R306	1-216-053-00	METAL CHIP	1.5K	5%	1/10W	
R311	1-216-009-00	METAL CHIP	22	5%	1/10W	
R312	1-216-009-00	METAL CHIP	22	5%	1/10W	
R313	1-216-049-00	METAL CHIP	1K	5%	1/10W	
R314	1-216-049-00	METAL CHIP	1K	5%	1/10W	
R315	1-216-049-00	METAL CHIP	1K	5%	1/10W	
R316	1-217-806-11	METAL GLAZE	1	5%	1/8W	
R317	1-217-806-11	METAL GLAZE	1	5%	1/8W	
R405	1-216-067-00	METAL CHIP	5.6K	5%	1/10W	
R406	1-216-053-00	METAL CHIP	1.5K	5%	1/10W	
R411	1-216-009-00	METAL CHIP	22	5%	1/10W	
R412	1-216-009-00	METAL CHIP	22	5%	1/10W	
R413	1-216-049-00	METAL CHIP	1K	5%	1/10W	
R414	1-216-049-00	METAL CHIP	1K	5%	1/10W	
R415	1-216-049-00	METAL CHIP	1K	5%	1/10W	
R416	1-217-806-11	METAL GLAZE	1	5%	1/8W	
R417	1-217-806-11	METAL GLAZE	1	5%	1/8W	

****

MISCELLANEOUS
****

F1	⚠ 1-532-552-11	FUSE, GLASS TUBE 15A	
F2	⚠ 1-532-414-11	FUSE, GLASS TUBE 1A	
IC101	8-759-147-25	IC uPC2500H	
IC201	8-759-147-25	IC uPC2500H	
IC301	8-759-147-25	IC uPC2500H	
IC401	8-759-147-25	IC uPC2500H	

****

• MOUNTING HARDWARE

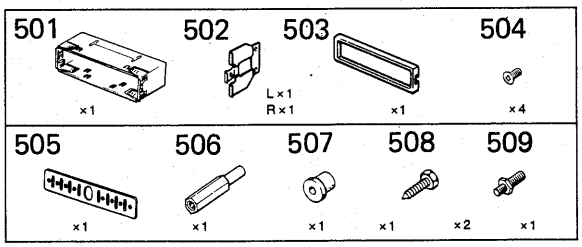

Ref. No.	Part No.	Description	Remark
501	3-323-219-01	FRAME, FITTING	
502	3-339-403-01	SPRING	
503	3-369-964-01	COLLAR	
504	7-682-247-09	SCREW +K 3X6	
505	3-323-217-01	HOLDER, BUSHING	
506	3-323-210-01	ADJUSTOR, STUD BOLT	
507	3-349-410-01	BUSHING	
508	3-302-126-01	SCREW, TAPPING (DIA.5X20)	
509	3-323-209-01	BOLT (4-5), STUD	

Ref. No.	Part No.	Description	Remark
		ACCESSORIES & PACKING MATERIALS	
		**********	
	1-575-463-11	CORD (WITH CONNECTOR) 8P	
	1-590-825-11	CORD (WITH CONNECTOR)	
	1-590-851-11	CORD (WITH JACK)	
	3-336-617-01	BAG, PROTECTION	
	3-339-410-01	COVER (2), PIN JACK	
*	3-355-207-01	CARDBOARD (E)	
	3-368-116-01	CASE	
*	3-368-181-01	INDIVIDUAL CARTON (XTC-100)	
*	3-369-988-01	INDIVIDUAL CARTON (XTC-101)	
*	3-369-990-01	INDIVIDUAL CARTON (XTC-102)	
*	3-368-183-01	CUSHION (UPPER)	
*	3-368-184-01	CUSHION (LOWER)	
	3-753-054-11	MANUAL, INSTRUCTION (ENGLISH, FRENCH, SPANISH, DUTCH, CHINESE) (XTC-100; E, AEP/XTC-101)	
	3-753-054-21	MANUAL, INSTRUCTION (ENGLISH, FRENCH) (XTC-100; US, Canadian)	
	3-753-054-41	MANUAL, INSTRUCTION (XTC-100; AEP) (SWEDISH, ITALIAN, PORTUGUESE)	
	3-753-054-51	MANUAL, INSTRUCTION (ENGLISH, FRENCH, GERMAN, ITALIAN) (XTC-102)	
	3-753-055-11	MANUAL, INSTALLATION, CONNECTION (ENGLISH, FRENCH, SPANISH, DUTCH, CHINESE) (XTC-100; E, AEP/XTC-101)	
	3-753-055-21	MANUAL, INSTALLATION, CONNECTION (ENGLISH, FRENCH) (XTC-100; US, Canadian)	
	3-753-055-41	MANUAL, INSTALLATION, CONNECTION (SWEDISH, ITALIAN, PORTUGUESE) (XTC-100; AEP)	
	3-753-055-51	MANUAL, INSTALLATION, CONNECTION (ENGLISH, FRENCH, GERMAN, ITALIAN) (XTC-102)	

****

HARDWARE LIST

#1	7-624-104-04	STOP RING 2.0, TYPE -E
#2	7-685-103-19	SCREW +P 2X5 TYPE2 SLIT
#3	7-685-134-19	SCREW +P 2.6X8 TYPE2 NON-SLIT
#4	7-685-234-19	SCREW +KTP 2.6X8 TYPE2NON-SLIT
#5	7-621-255-15	SCREW +PTT 2X3 (S)
#6	7-621-770-67	SCREW +PTT 2.6X6 (S)
#7	7-621-773-95	SCREW +PTT 2.6X6 (S)
#8	7-685-135-19	SCREW +P 2.6X10 TYPE2 NON-SLIT

****

English
91G0578-1
Printed in Japan
© 1991.7

9-956-346-11

Sony Corporation
Mobile Electronics Group

Published by Customer Relations and Service Group

XTC-100/101/102

SONY
SERVICE MANUAL

US Model
Canadian Model
E Model
XTC-100
AEP Model
XTC-100/101
Germany Model
XTC-102

SUPPLEMENT-1

Subject: Circuit Modification

File this supplement with the service manual.

• DIFFERENT PARTS LIST (MECHANICAL PARTS)

Page	Ref. No	FORMER		NEW	
		Part No.	Description	Part No.	Description
38	70	*A-3222-218-A	POWER BOARD, COMPLETE	*A-3222-218-A	POWER BOARD, COMPLETE (XTC-100/101)
		—	—	*A-3222-343-A	POWER BOARD, COMPLETE (XTC-102)

Adjustment Location:

Former

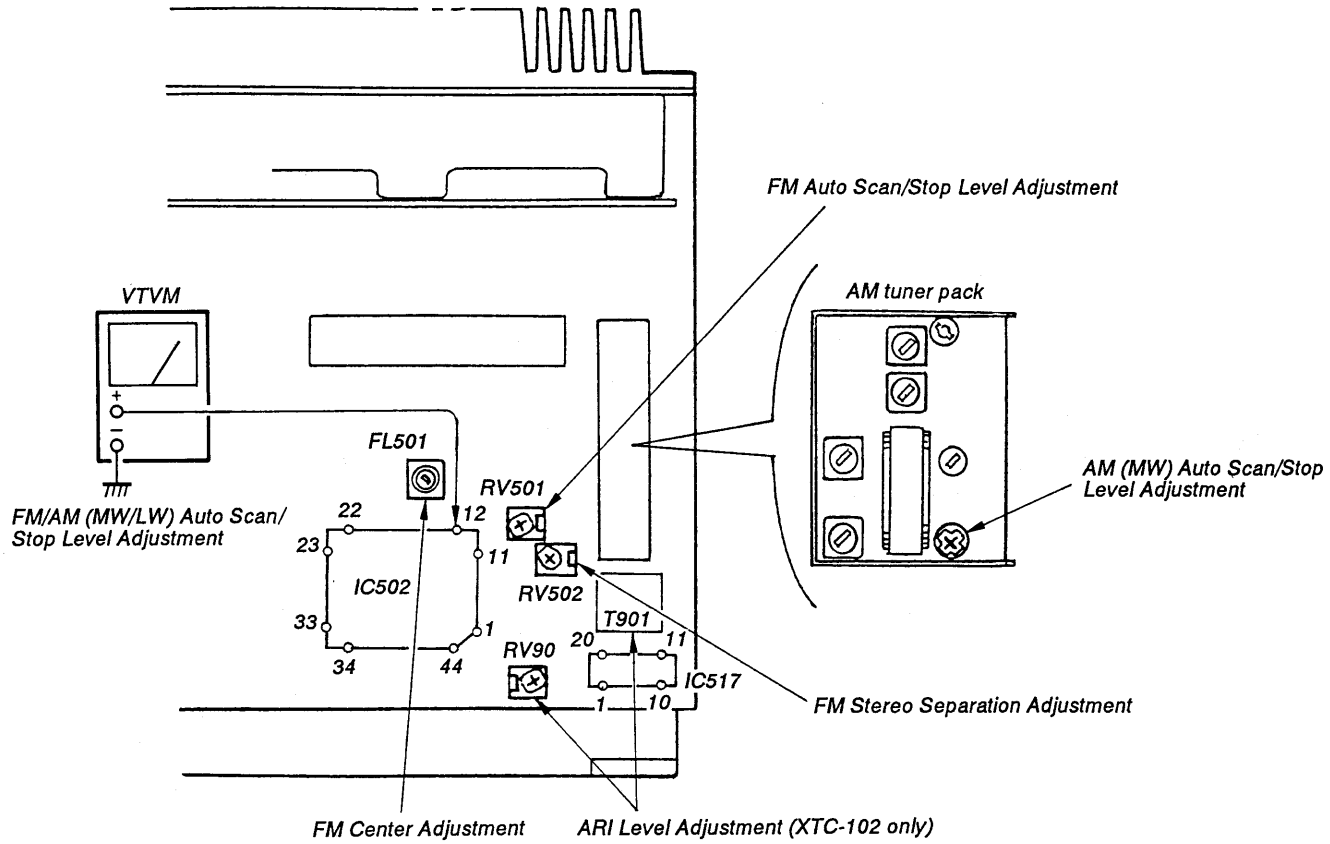

New

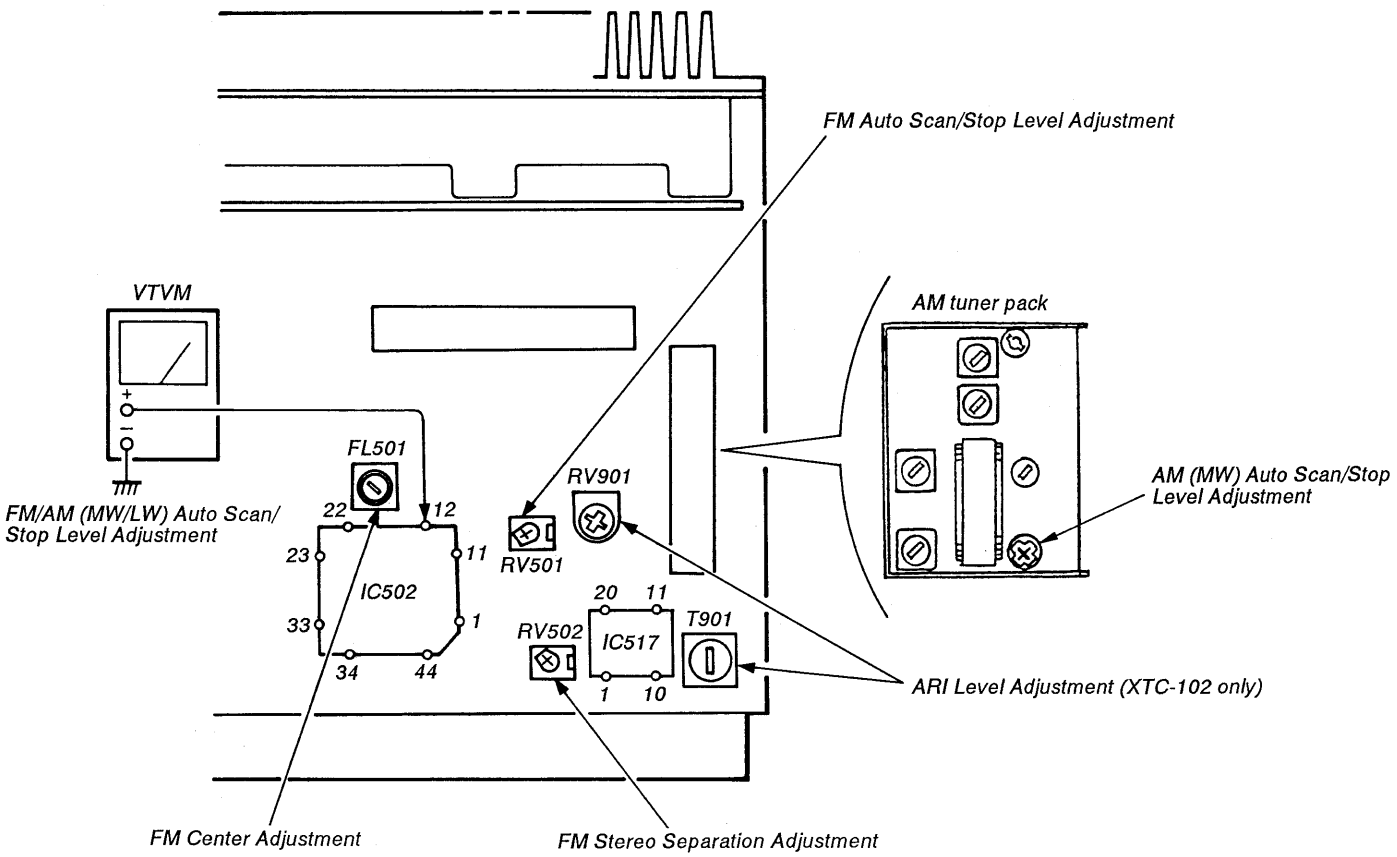

3-5. PRINTED WIRING BOARDS – DISPLAY, POWER SECTION –

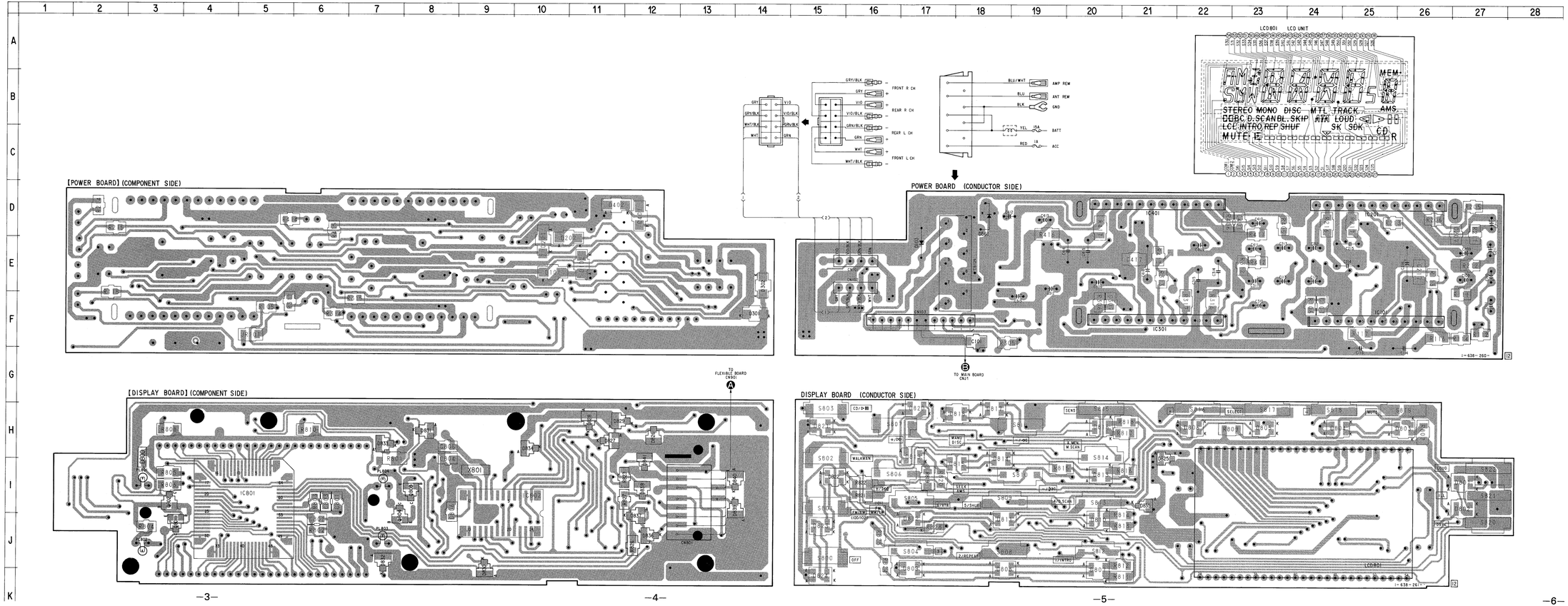

• Semiconductor Location

Ref. No.	Location
D101	E-10
D102	E-11
D103	E-17
D201	E-10
D202	E-10
D301	F-14
D302	E-14
D401	D-12
D402	D-11
D561	D-18
D800	I-3
D801	I-27
D802	I-27
D803	H-26
D804	H-24
D805	H-23
D806	H-22
D807	J-20
D808	J-18
D809	J-17
D810	J-20
D811	J-18
D812	J-17
D813	I-20
D814	I-18
D815	I-18
D816	H-20
D817	H-18
D818	H-18
D819	H-17
D820	H-17
D821	H-15
D822	I-15
D823	J-15
D824	K-15
D825	H-21
D826	H-12
D827	H-11
D828	H-11
D829	H-11
D830	K-9
D831	H-8
D832	J-7
D833	H-7
D834	H-10
D835	I-21
D836	J-12
D837	J-12
D838	I-12
D839	I-14
D840	I-14
D841	I-12
IC101	F-25
IC201	D-25
IC301	F-21
IC401	D-21
IC801	I-5
IC802	I-10
Q801	J-3
Q802	I-3
Q803	I-8
Q804	J-7

Note:

- ○——● : parts extracted from the component side.
- ● : Through hole.
- ▒▒▒ : Pattern from the side which enables seeing.

(The other layers' patterns are not indicated.)

Caution:

Pattern face side: (Conductor Side)	Parts on the pattern face side seen from the pattern face are indicated.
Parts face side: (Component Side)	Parts on the parts face side seen from the parts face are indicated.

3-4. PRINTED WIRING BOARDS – MAIN SECTION –

• See page 36 for Semiconductor Lead Layouts.

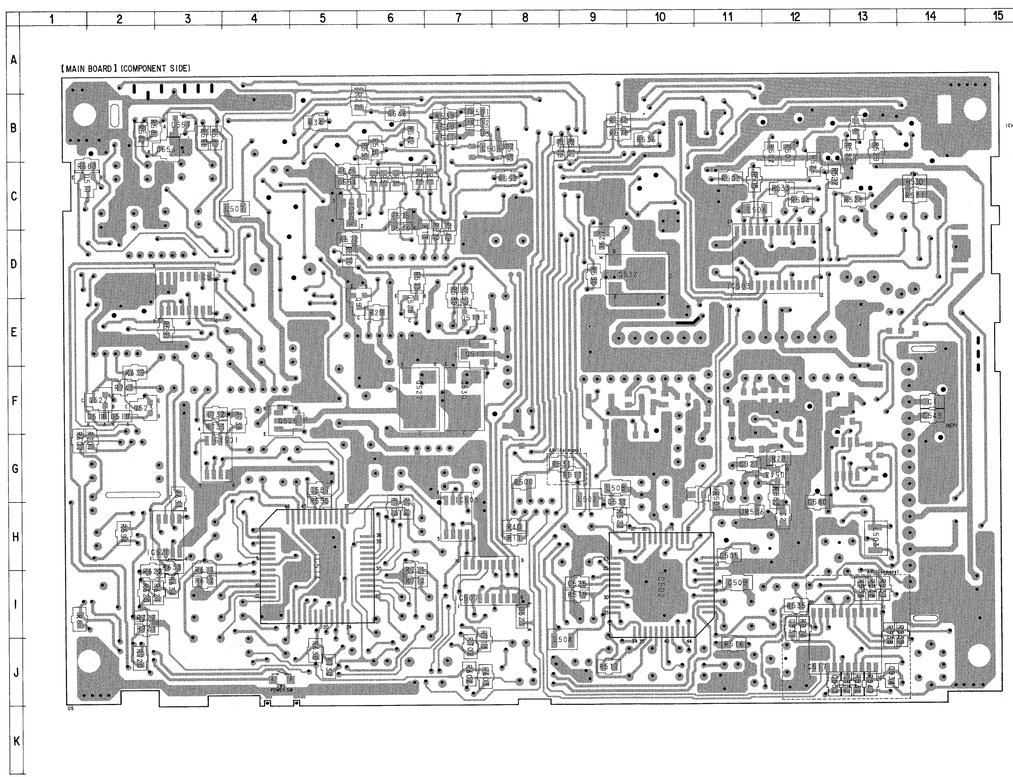

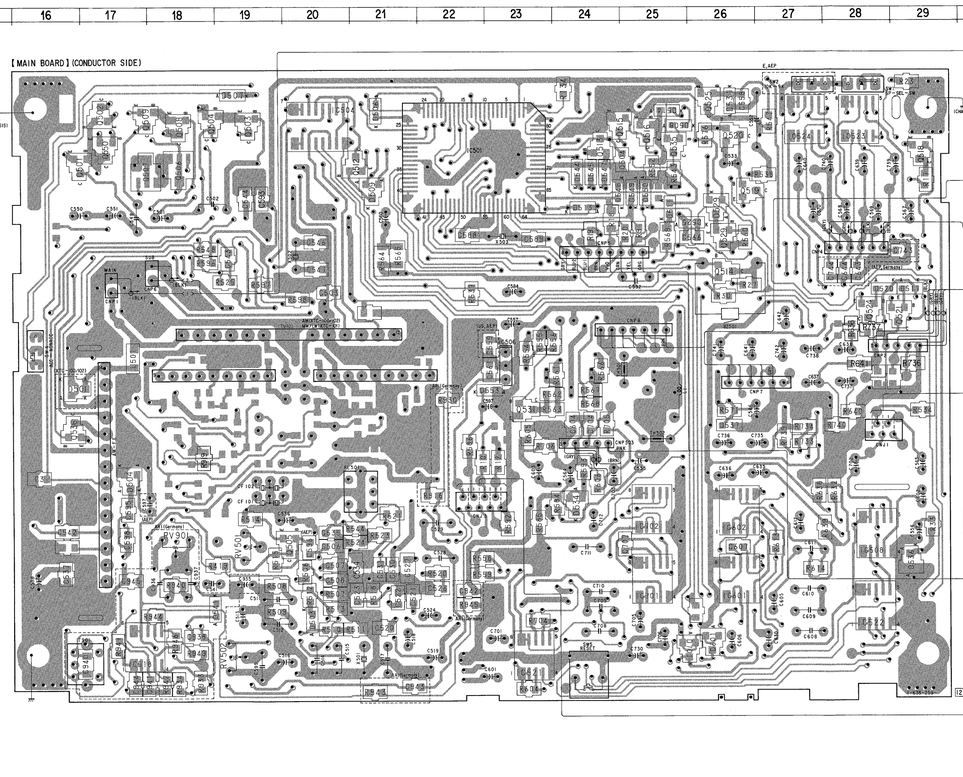

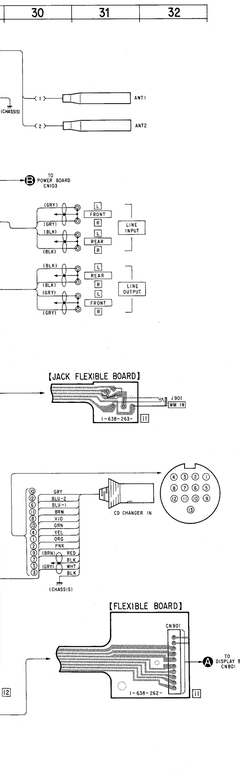

• **Semiconductor Location**

Ref. No.	Location	Ref. No.	Location
D501	F-16	IC520	H-3
D503	I-20	IC521	J-23
D504	G-17	IC522	I-28
D506	B-21	IC523	B-28
D507	B-19	IC524	B-27
D508	B-25	IC601	I-26
D509	C-21	IC602	H-26
D511	B-26	IC701	I-25
D513	C-24	IC702	H-25
D514	B-25		
D517	D-29	Q5	E-6
D520	D-28	Q501	C-16
D521	I-8	Q502	B-17
D525	C-26	Q503	B-19
D527	D-9	Q504	B-18
D529	C-26	Q505	H-20
D531	B-26	Q506	C-18
D534	H-24	Q507	C-17
D536	H-29	Q508	B-18
D537	F-26	Q509	B-17
D544	C-24	Q511	C-1
D545	C-24	Q512	C-21
D546	C-6	Q513	B-24
D547	C-24	Q514	D-26
D548	C-24	Q515	B-24
D549	C-25	Q516	B-25
D550	C-25	Q517	E-7
D553	F-23	Q518	E-7
D556	B-3	Q519	C-26
D557	B-3	Q520	B-26
D601	J-26	Q521	E-29
D701	J-25	Q522	F-2
		Q523	F-2
IC501	B-22	Q524	E-28
IC502	I-10	Q525	B-26
IC503	D-11	Q526	F-4
IC504	B-20	Q527	F-6
IC505	C-5	Q528	E-6
IC506	E-23	Q529	D-26
IC507	I-7	Q530	F-7
IC508	H-28	Q531	F-23
IC509	G-7	Q532	D-9
IC512	D-3	Q535	B-25
IC514	H-5	Q536	G-16
IC517	J-12	Q543	G-12
IC518	J-17	Q550	B-17
IC519	G-3		

Note:

- ○——— : parts extracted from the component side.
- ● : Through hole.
- ▒▒▒ : Pattern from the side which enables seeing. (The other layers' patterns are not indicated.)

Caution:	
Pattern face side: (Conductor Side)	Parts on the pattern face side seen from the pattern face are indicated.
Parts face side: (Component Side)	Parts on the parts face side seen from the parts face are indicated.

3-3. SCHEMATIC DIAGRAM

Note:

- All capacitors are in μF unless otherwise noted. pF: μμF 50 WV or less are not indicated except for electrolytics and tantalums.
- All resistors are in Ω and ¼ W or less unless otherwise specified.
- Components for right channel have same values as for left channel. Reference numbers are coded from
- △ : internal component.
- B+ : B+ Line.
- ▭ : adjustment for repair.
- Power voltage is dc 14.4 V and fed with regulated dc power supply from battery terminal.
- Voltages and waveforms are dc with respect to ground under no-signal (detuned) conditions.
  no mark : FM/AM/PB
  ( ) : AM
  < > : PB
- Voltages are taken with a VOM (10 MΩ/V).
  Voltage variations may be noted due to normal production tolerances.
- Signal path.
  ⇨ : FM ⊃ : PB

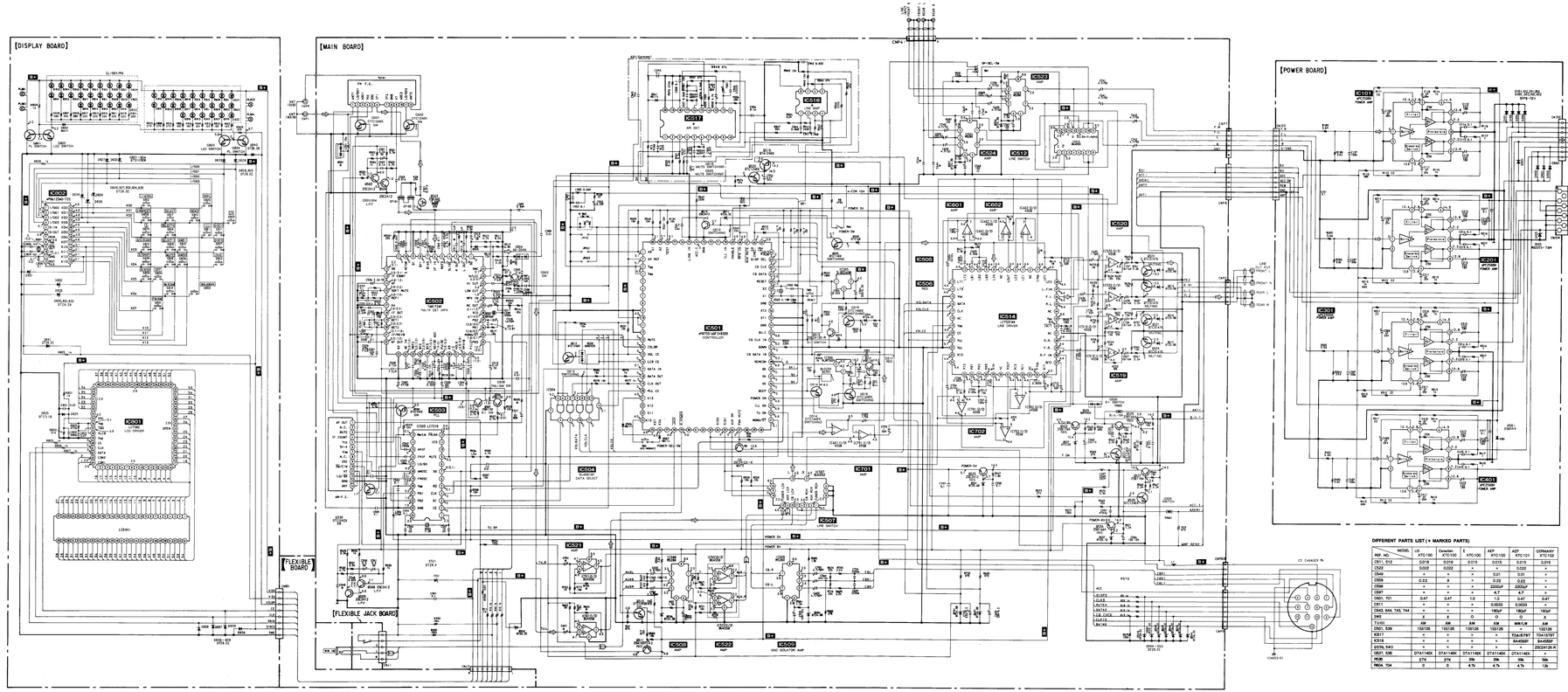

DIFFERENT PARTS LIST (* MARKED PARTS)

REF. NO. \ MODEL	US WTC-100	Canadian WTC-100	E WTC-100	AEP WTC-100	AEP WTC-101	GERMANY WTC-102
CN11, 512	0.015	0.015	0.015	0.015	0.015	0.015
CN22	0.022	0.022	×	×	0.022	×
CN49	×	×	×	0.01	0.01	×
CN59	0.22	0.22	×	0.22	0.22	×
CN96	×	×	×	2000uF	2000uF	×
CN97	×	×	×	4.7	4.7	×
CN01, 701	0.47	0.47	1.0	1.0	0.47	0.47
CN11	×	×	×	0.0033	0.0033	×
CN43, 644, 743, 744	×	×	×	180uF	180uF	180uF
CN9	X	X	0	0	0	X
TV101	AM	AM	AM	AM	MW/LW	AM
CN01, 539	1SS126	1SS126	1SS126	1SS126	×	1SS126
CN17	×	×	×	×	TSA1579T	TSA1579T
IC518	×	×	×	×	BA4000F	BA4000F
CN39, 540	×	×	×	×	×	2SC2412K-R
CN51, 538	DTA114EK	DTA114EK	DTA114EK	DTA114EK	DTA114EK	×
HEIR	27K	27K	20k	20k	20k	50k
RN04, 104	0	0	4.7k	4.7k	4.7k	12k

SECTION 5
ELECTRICAL PARTS LIST

DISPLAY

NOTE:
- Due to standardization, replacements in the parts list may be different from the parts specified in the diagrams or the components used on the set.
- -XX and -X mean standardized parts, so they may have some difference from the original one.
- RESISTORS
  All resistors are in ohms.
  METAL:Metal-film resistor.
  METAL OXIDE: Metal oxide-film resistor.
  F:nonflammable
- Items marked "*" are not stocked since they are seldom required for routine service. Some delay should be anticipated when ordering these items.
- SEMICONDUCTORS
  In each case, u:μ, for example:
  uA ..: μA.. uPA..: μPA..
  uPB..: μPB.. uPC..: μPC.. uPD..: μPD..
- CAPACITORS
  uF: μF
- COILS
  uH: μH

When indicating parts by reference number, please include the board.

Ref. No.	Part No.	Description			Remark
*	A-3222-250-A	DISPLAY BOARD, COMPLETE			
		**********			
*	3-357-086-01	PLATE (LCD), LIGHT GUIDE			
*	3-357-087-01	HOLDER (LCD)			
	3-372-360-01	SHEET (REFLECTOR)			
		< CAPACITOR >			
C801	1-164-222-11	CERAMIC CHIP	0.22uF		25V
C802	1-163-137-00	CERAMIC CHIP	680PF	5%	50V
C803	1-164-005-11	CERAMIC CHIP	0.47uF		25V
C804	1-163-251-11	CERAMIC CHIP	100PF	5%	50V
C805	1-163-251-11	CERAMIC CHIP	100PF	5%	50V
C806	1-164-004-11	CERAMIC CHIP	0.1uF	10%	25V
		< CONNECTOR >			
CNJ801	1-580-807-11	CONNECTOR, SOCKET 10P			
		< DIODE >			
D800	8-719-404-49	DIODE	MA111		
D801	8-719-987-45	DIODE	CL-155Y/PG-CD		
D802	8-719-987-45	DIODE	CL-155Y/PG-CD		
D803	8-719-987-45	DIODE	CL-155Y/PG-CD		
D804	8-719-987-45	DIODE	CL-155Y/PG-CD		
D805	8-719-987-45	DIODE	CL-155Y/PG-CD		
D806	8-719-987-45	DIODE	CL-155Y/PG-CD		
D807	8-719-987-45	DIODE	CL-155Y/PG-CD		
D808	8-719-987-45	DIODE	CL-155Y/PG-CD		
D809	8-719-987-45	DIODE	CL-155Y/PG-CD		
D810	8-719-987-45	DIODE	CL-155Y/PG-CD		
D811	8-719-987-45	DIODE	CL-155Y/PG-CD		
D812	8-719-987-45	DIODE	CL-155Y/PG-CD		
D813	8-719-987-45	DIODE	CL-155Y/PG-CD		
D814	8-719-987-45	DIODE	CL-155Y/PG-CD		
D815	8-719-987-45	DIODE	CL-155Y/PG-CD		
D816	8-719-987-45	DIODE	CL-155Y/PG-CD		
D817	8-719-987-45	DIODE	CL-155Y/PG-CD		
D818	8-719-987-45	DIODE	CL-155Y/PG-CD		
D819	8-719-987-45	DIODE	CL-155Y/PG-CD		
D820	8-719-987-45	DIODE	CL-155Y/PG-CD		
D821	8-719-987-45	DIODE	CL-155Y/PG-CD		
D822	8-719-987-45	DIODE	CL-155Y/PG-CD		
D823	8-719-987-45	DIODE	CL-155Y/PG-CD		
D824	8-719-987-45	DIODE	CL-155Y/PG-CD		
D825	8-719-976-21	DIODE	DTZ5.1B		
D826	8-719-977-08	DIODE	DTZ6.2C		
D827	8-719-977-08	DIODE	DTZ6.2C		
D828	8-719-977-08	DIODE	DTZ6.2C		
D829	8-719-977-08	DIODE	DTZ6.2C		
D830	8-719-977-08	DIODE	DTZ6.2C		
D831	8-719-977-08	DIODE	DTZ6.2C		
D832	8-719-977-08	DIODE	DTZ6.2C		
D833	8-719-977-08	DIODE	DTZ6.2C		
D834	8-719-977-08	DIODE	DTZ6.2C		
D835	8-719-977-08	DIODE	DTZ6.2C		
D836	8-719-977-08	DIODE	DTZ6.2C		
D837	8-719-977-08	DIODE	DTZ6.2C		
D838	8-719-977-08	DIODE	DTZ6.2C		
D839	8-719-977-08	DIODE	DTZ6.2C		
D840	8-719-977-08	DIODE	DTZ6.2C		
D841	8-719-977-08	DIODE	DTZ6.2C		
		< IC >			
IC801	8-759-821-44	IC	LC7582		
		< LIQUID CRYSTAL DISPLAY >			
LCD801	1-808-773-11	DISPLAY PANEL, LIQUID CRYSTAL			
		< PILOT LAMP >			
PL801	1-518-553-11	LAMP, PILOT (GREEN)			
PL802	1-518-553-11	LAMP, PILOT (GREEN)			

DISPLAY MAIN

Ref. No.	Part No.	Description				Remark
PL803	1-518-646-11	LAMP, PILOT (AMBER)				
PL804	1-518-646-11	LAMP, PILOT (AMBER)				
		< TRANSISTOR >				
Q801	8-729-904-66	TRANSISTOR DTD113EK				
Q802	8-729-904-66	TRANSISTOR DTD113EK				
Q803	8-729-904-66	TRANSISTOR DTD113EK				
Q804	8-729-904-66	TRANSISTOR DTD113EK				
		< RESISTOR >				
R801	1-216-198-00	METAL CHIP	1K	5%	1/8W	
R802	1-216-090-00	METAL CHIP	51K	5%	1/10W	
R803	1-216-113-00	METAL CHIP	470K	5%	1/10W	
R804	1-216-049-00	METAL CHIP	1K	5%	1/10W	
R805	1-216-184-00	METAL GLAZE	270	5%	1/8W	
R806	1-216-188-00	METAL GLAZE	390	5%	1/8W	
R807	1-216-188-00	METAL GLAZE	390	5%	1/8W	
R808	1-216-184-00	METAL GLAZE	270	5%	1/8W	
R809	1-216-188-00	METAL GLAZE	390	5%	1/8W	
R810	1-216-184-00	METAL GLAZE	270	5%	1/8W	
R811	1-216-182-00	METAL GLAZE	220	5%	1/8W	
R812	1-216-179-00	METAL GLAZE	160	5%	1/8W	
R813	1-216-182-00	METAL GLAZE	220	5%	1/8W	
R814	1-216-179-00	METAL GLAZE	160	5%	1/8W	
R815	1-216-182-00	METAL GLAZE	220	5%	1/8W	
R816	1-216-179-00	METAL GLAZE	160	5%	1/8W	
R817	1-216-182-00	METAL GLAZE	220	5%	1/8W	
R818	1-216-179-00	METAL GLAZE	160	5%	1/8W	
R819	1-216-182-00	METAL GLAZE	220	5%	1/8W	
R820	1-216-179-00	METAL GLAZE	160	5%	1/8W	
R821	1-216-182-00	METAL GLAZE	220	5%	1/8W	
R822	1-216-179-00	METAL GLAZE	160	5%	1/8W	
R823	1-216-198-00	METAL CHIP	1K	5%	1/8W	
R824	1-216-033-00	METAL CHIP	220	5%	1/10W	
R825	1-216-049-00	METAL CHIP	1K	5%	1/10W	
R826	1-216-049-00	METAL CHIP	1K	5%	1/10W	
R827	1-216-049-00	METAL CHIP	1K	5%	1/10W	
R828	1-216-049-00	METAL CHIP	1K	5%	1/10W	
		< SWITCH >				
S800	1-572-655-11	SWITCH KEYBOARD (OFF)				
S801	1-572-655-11	SWITCH KEYBOARD (FM/AM) (XTC-100/102)				
S801	1-572-655-11	SWITCH KEYBOARD (FM/MW/LW) (XTC-101)				
S802	1-572-655-11	SWITCH KEYBOARD (WALKMAN)				
S803	1-572-655-11	SWITCH KEYBOARD (CD/▶II)				
S804	1-572-655-11	SWITCH KEYBOARD (3)				
S805	1-572-655-11	SWITCH KEYBOARD (6/ATA)				
S806	1-572-655-11	SWITCH KEYBOARD (AMS+/▶▶I)				
S807	1-572-655-11	SWITCH KEYBOARD (DISC+/▶▶)				
S808	1-572-655-11	SWITCH KEYBOARD (2/REPEAT)				
S809	1-572-655-11	SWITCH KEYBOARD (5/SHUF)				
S810	1-572-655-11	SWITCH KEYBOARD (AMS-/I◀◀)				
S811	1-572-655-11	SWITCH KEYBOARD (DISC-/◀◀)				
S812	1-572-655-11	SWITCH KEYBOARD (1/INTRO)				
S813	1-572-655-11	SWITCH KEYBOARD (4/D. SCAN)				
S814	1-572-655-11	SWITCH KEYBOARD (M. SCAN)				
S815	1-572-655-11	SWITCH KEYBOARD (SENS)				
S816	1-572-655-11	SWITCH KEYBOARD (SELECT +)				
S817	1-572-655-11	SWITCH KEYBOARD (SELECT)				
S818	1-572-655-11	SWITCH KEYBOARD (SELECT -)				
S819	1-572-655-11	SWITCH KEYBOARD (MUTE)				
S820	1-572-655-11	SWITCH KEYBOARD (DSPL)				
S821	1-572-655-11	SWITCH KEYBOARD (ILL)				
S822	1-572-655-11	SWITCH KEYBOARD (LOUD)				
		< VIBRATOR >				
X801	1-579-277-21	VIBLATOR, CERAMIC				

****

*	A-3222-215-A	MAIN BOARD COMPLETE (XTC-100:US, Canadian) **********				
*	A-3222-254-A	MAIN BOARD COMPLETE (XTC-100:E, AEP) **********				
*	A-3222-255-A	MAIN BOARD COMPLETE (XTC-101) **********				
*	A-3222-256-A	MAIN BOARD COMPLETE (XTC-102) **********				
	1-465-786-11	FRONT END, FM				
		< BUZZER >				
BZ501	1-529-078-11	BUZZER, PIEZOELECTRIC				
		< CAPACITOR >				
C1	1-164-004-11	CERAMIC CHIP	0.1uF	10%	25V	
C2	1-164-001-11	CERAMIC CHIP	0.1uF	10%	25V	
C3	1-163-153-00	CERAMIC CHIP	0.01uF	10%	50V	
C6	1-163-153-00	CERAMIC CHIP	0.01uF	105	50V	
C501	1-124-257-00	ELECT	2.2uF	20%	50V	
C502	1-136-165-00	FILM	0.1uF	5%	50V	
C503	1-136-153-00	FILM	0.01uF	5%	50V	
C504	1-164-004-11	CERAMIC CHIP	0.1uF	10%	25V	
C505	1-163-809-11	CERAMIC CHIP	0.047uF	10%	25V	
C506	1-163-141-00	CERAMIC CHIP	1000PF	5%	50V	

Ref. No.	Part No.	Description			Remark
C507	1-163-809-11	CERAMIC CHIP	0.047uF	10%	25V
C508	1-163-809-11	CERAMIC CHIP	0.047uF	10%	25V
C509	1-164-004-00	CERAMIC CHIP	0.1uF	10%	25V
C511	1-136-156-00	FILM	0.018uF	5%	50V
		(US, Canadian)			
C511	1-163-023-00	FILM	0.015uF	5%	50V
		(AEP, E, GERMANY)			
C512	1-136-156-00	FILM	0.018uF	5%	50V
		(US, Canadian)			
C512	1-163-023-00	FILM	0.015uF	5%	50V
		(AEP, E, GERMANY)			
C513	1-124-257-00	ELECT	2.2uF	20%	50V
C514	1-136-162-00	FILM	0.056uF	5%	50V
C515	1-136-169-00	FILM	0.22uF	5%	50V
C516	1-126-163-11	ELECT	4.7uF	20%	50V
C517	1-136-165-00	FILM	0.1uF	5%	50V
C518	1-126-301-11	ELECT	1uF	20%	50V
C519	1-126-159-11	ELECT	0.47uF	20%	50V
C520	1-163-809-11	CERAMIC CHIP	0.047uF	10%	25V
C521	1-164-004-11	CERAMIC CHIP	0.1uF	10%	25V
C522	1-163-037-11	CERAMIC CHIP	0.022uF	10%	25V
		(XTC-100:US, Canadian/XTC-101)			
C523	1-164-161-11	CERAMIC CHIP	2200PF	10%	50V
C524	1-126-157-11	ELECT	10uF	20%	16V
C525	1-163-809-11	CERAMIC CHIP	0.047uF	10%	25V
C526	1-163-809-11	CERAMIC CHIP	0.047uF	10%	25V
C527	1-164-004-11	CERAMIC CHIP	0.1uF	10%	25V
C528	1-136-166-00	FILM	0.12uF	5%	50V
C529	1-130-467-00	MYLAR	470PF	5%	50V
C530	1-164-004-11	CERAMIC CHIP	0.1uF	10%	25V
C531	1-163-235-11	CERAMIC CHIP	22PF	5%	50V
C532	1-163-103-00	CERAMIC CHIP	27PF	5%	50V
C533	1-126-159-11	ELECT	0.47UF	20%	50V
C534	1-164-004-11	CERAMIC CHIP	10uF	20%	16V
C536	1-124-257-00	ELECT	2.2uF	20%	50V
C537	1-163-037-11	CERAMIC CHIP	0.022uF	10%	25V
C538	1-124-584-00	ELECT	100uF	20%	10V
C541	1-124-499-11	ELECT, NONPOLAR	1uF	20%	50V
C542	1-163-141-00	MYLAR	1000PF	5%	50V
C543	1-163-251-11	CERAMIC CHIP	100PF	5%	50V
C544	1-164-004-11	CERAMIC CHIP	0.1uF	10%	25V
C546	1-163-097-00	CERAMIC CHIP	15PF	5%	50V
C547	1-163-097-00	CERAMIC CHIP	15PF	5%	50V
C548	1-136-157-00	FILM	0.022uF	5%	50V
C549	1-136-153-00	FILM	0.01uF	5%	50V (AEP)
C550	1-126-162-11	ELECT	3.3uF	20%	50V
C551	1-126-162-11	ELECT	3.3uF	20%	50V
C552	1-125-486-11	DOUBLE LAYERS	0.22F		5.5V
C553	1-164-004-11	CERAMIC CHIP	0.1uF	10%	25V

Ref. No.	Part No.	Description			Remark
C554	1-163-037-11	CERAMIC CHIP	0.022uF	10%	25V
C555	1-124-443-00	ELECT	100uF	20%	10V
C556	1-124-584-00	ELECT	100uF	20%	10V
C557	1-126-157-11	ELECT	10uF	20%	16V
C558	1-164-004-11	CERAMIC CHIP	0.1uF	10%	25V
C559	1-163-169-00	FILM	0.22uF	5%	50V
		(US, AEP)			
C560	1-126-157-11	ELECT	220uF	20%	10V
C561	1-164-004-11	CERAMIC CHIP	0.1uF	10%	25V
C564	1-124-584-00	ELECT	100uF	20%	10V
C565	1-124-584-00	ELECT	100uF	20%	10V
C566	1-163-037-11	CERAMIC CHIP	0.022uF	10%	25V
C567	1-124-584-00	ELECT	100uF	20%	10V
C568	1-124-584-00	ELECT	100uF	20%	10V
C569	1-124-584-00	ELECT	100uF	20%	10V
C570	1-124-584-00	ELECT	100uF	20%	10V
C580	1-163-037-11	CERAMIC CHIP	0.022uF	10%	25V
C582	1-164-004-11	CERAMIC CHIP	0.1uF	10%	25V
C584	1-124-442-00	ELECT	330uF	20%	6.3V
C586	1-124-584-00	ELECT	100uF	20%	10V
C587	1-163-037-11	CERAMIC CHIP	0.022uF	10%	25V
C588	1-163-099-00	CERAMIC CHIP	18PF	5%	50V
C589	1-163-099-00	CERAMIC CHIP	18PF	5%	50V
C592	1-163-017-00	CERAMIC CHIP	4700PF	10%	50V
C593	1-136-153-00	CERAMIC CHIP	0.01uF	5%	50V
C595	1-164-004-11	CERAMIC CHIP	0.1uF	10%	25V
C596	1-164-161-11	CERAMIC CHIP	2200PF	10%	50V (AEP)
C597	1-126-163-11	ELECT	4.7uF	20%	25V (AEP)
C598	1-136-175-00	FILM	0.068uF	5%	50V
C599	1-130-471-00	MYLAR	0.001uF	5%	50V
C601	1-126-159-11	ELECT	0.47uF	20%	50V
		(XTC-100; US, Canadian/XTC-101/XTC-102)			
C601	1-126-301-11	ELECT	1.0uF	20%	50V
		(XCT-100; AEP, E)			
C602	1-124-257-00	ELECT	2.2uF	20%	50V
C603	1-126-163-11	ELECT	4.7uF	20%	50V
C604	1-163-161-11	CERAMIC CHIP	2200PF	5%	50V
C605	1-126-301-11	ELECT	1uF	20%	50V
C606	1-126-157-11	ELECT	10uF	20%	16V
C607	1-163-251-11	CERAMIC CHIP	100PF	5%	50V
C608	1-130-476-00	FILM	0.0027uF	5%	50V
C609	1-136-162-00	FILM	0.056uF	5%	50V
C610	1-136-162-00	FILM	0.056uF	5%	50V
C611	1-130-477-00	FILM	0.0033uF	5%	50V (AEP)
C612	1-124-464-11	ELECT	0.22uF	20%	50V
C630	1-124-442-00	ELECT	330uF	20%	6.3V
C635	1-126-301-11	ELECT	1uF	20%	50V
C636	1-126-301-11	ELECT	1uF	20%	50V
C637	1-126-157-11	ELECT	10uF	20%	16V

MAIN

Ref. No.	Part No.	Description			Remark
C638	1-126-157-11	ELECT	10uF	20%	16V
C639	1-126-163-11	ELECT	4.7uF	20%	50V
C640	1-126-163-11	ELECT	4.7uF	20%	50V
C641	1-126-163-11	ELECT	4.7uF	20%	50V
C642	1-126-163-11	ELECT	4.7uF	20%	50V
C643	1-163-123-00	CERAMIC CHIP (AEP, GERMANY)	180PF	5%	50V
C644	1-163-123-00	CERAMIC CHIP (AEP, GERMANY)	180PF	5%	50V
C701	1-126-159-11	ELECT (XTC-100; US, Canadian/XTC-101/102)	0.47uF	20%	50V
C701	1-126-301-11	ELECT (XTC-100; AEP, E)	1.0uF	20%	50V
C702	1-124-257-00	ELECT	2.2uF	20%	50V
C703	1-126-163-11	ELECT	4.7uF	20%	50V
C704	1-164-161-11	CERAMIC CHIP	2200PF	10%	50V
C705	1-126-301-11	ELECT	1uF	20%	50V
C706	1-126-157-11	ELECT	10uF	20%	16V
C707	1-163-251-11	CERAMIC CHIP	100PF	5%	50V
C708	1-130-476-00	FILM	0.0027uF	5%	50V
C709	1-136-162-00	FILM	0.056uF	5%	50V
C710	1-136-162-00	FILM	0.056uF	5%	50V
C711	1-130-477-00	FILM	0.003uF	5%	50V
C712	1-124-464-11	ELECT	0.22uF	20%	50V
C730	1-124-442-00	ELECT	330uF	20%	6.3V
C735	1-126-301-11	ELECT	1uF	20%	50V
C736	1-126-301-11	ELECT	1uF	20%	50V
C737	1-126-157-11	ELECT	10uF	20%	16V
C738	1-126-157-11	ELECT	10uF	20%	16V
C739	1-126-163-11	ELECT	4.7uF	20%	50V
C740	1-126-163-11	ELECT	4.7uF	20%	50V
C741	1-126-163-11	ELECT	4.7uF	20%	50V
C742	1-126-163-11	ELECT	4.7uF	20%	50V
C743	1-163-123-00	CERAMIC CHIP (AEP, GERMANY)	180PF	5%	50V
C744	1-163-123-00	CERAMIC CHIP (AEP, GERMANY)	180PF	5%	50V
C921	1-164-232-11	CERAMIC CHIP	0.01uF		50V
C931	1-163-077-00	CERAMIC CHIP (XTC-102)	0.1uF	10%	25V
C932	1-163-809-11	CERAMIC CHIP (XTC-102)	0.047uF	10%	25V
C933	1-163-809-11	CERAMIC CHIP (XTC-102)	0.047uF	10%	25V
C934	1-164-004-11	CERAMIC CHIP (XTC-102)	0.1uF	10%	25V
C935	1-126-163-11	ELECT (XTC-102)	4.7uF	20%	50V
C936	1-163-833-00	CERAMIC CHIP (XTC-102)	0.068uF		25V
C937	1-163-833-00	CERAMIC CHIP (XTC-102)	0.068uF		25V
C938	1-164-004-11	CERAMIC CHIP (XTC-102)	0.1uF	10%	25V
C940	1-164-182-11	CERAMIC CHIP (XTC-102)	0.0033uF	10%	50V
C941	1-163-833-00	CERAMIC CHIP (XTC-102)	0.068uF		25V
C942	1-163-037-11	CERAMIC CHIP (XTC-102)	0.022uF	10%	25V
C943	1-163-245-11	CERAMIC CHIP (XTC-102)	56PF	5%	50V
C944	1-163-833-00	CERAMIC CHIP (XTC-102)	0.068uF		25V
C945	1-164-004-11	CERAMIC CHIP (XTC-102)	0.1uF	10%	25V
		< FILTER >			
CF101	1-567-415-11	FILTER, CERAMIC			
CF102	1-567-415-11	FILTER, CERAMIC			
		< CONNECTOR HOUSING >			
CNJ1	1-573-508-11	HOUSING, CONNECTOR 5P			
CNJ3	1-573-507-11	HOUSING, CONNECTOR 8P			
		< CONNECTOR PIN >			
* CNP1	1-506-984-11	PIN, CONNECTOR (PC BOARD) 2P			
* CNP2	1-506-987-11	PIN, CONNECTOR (PC BOARD) 5P			
* CNP4	1-506-988-11	PIN, CONNECTOR (PC BOARD) 6P			
* CNP5	1-506-990-11	PIN, CONNECTOR (PC BOARD) 8P			
* CNP6	1-506-984-11	PIN, CONNECTOR (PC BOARD) 2P			
* CNP7	1-506-988-11	PIN, CONNECTOR (PC BOARD) 6P			
* CNP8	1-506-989-11	PIN, CONNECTOR (PC BOARD) 7P			
* CNP9	1-506-987-11	PIN, CONNECTOR (PC BOARD) 5P			
		< DIODE >			
D501	8-719-800-76	DIODE	1SS226 (XTC-100/102)		
D503	8-719-404-49	DIODE	MA111		
D504	8-719-800-76	DIODE	1SS226		
D506	8-719-404-49	DIODE	MA111		
D507	8-719-404-49	DIODE	MA111		
D508	8-719-978-69	DIODE	DTZ16B		
D509	8-719-400-18	DIODE	MA152WK		
D511	8-719-977-07	DIODE	DTZ6.2B		
D513	8-719-404-49	DIODE	MA111		
D514	8-719-977-07	DIODE	DTZ6.2B		
D517	8-719-976-88	DIODE	DTZ3.9B		

MAIN

Ref. No.	Part No.	Description	Remark
D518	8-719-976-88	DIODE DTZ3.9B	
D519	8-719-976-88	DIODE DTZ3.9B	
D520	8-719-976-88	DIODE DTZ3.9B	
D521	8-719-404-49	DIODE DTZ6.2	
D525	8-719-978-30	DIODE DTZ6.2C	
D526	8-719-404-49	DIODE MA111	
D527	8-719-977-24	DIODE DTZ9.1B	
D529	8-719-104-34	DIODE 1S2836	
D531	8-714-977-03	DIODE DTZ5.6B	
D534	8-719-976-91	DIODE DTZ4.3B	
D536	8-719-976-91	DIODE DTZ4.3B	
D537	8-719-977-24	DIODE DTZ9.1B	
D541	8-719-404-49	DIODE MA111 (XTC-102)	
D544	8-719-977-07	DIODE DTZ6.2B	
D545	8-719-977-07	DIODE DTZ6.2B	
D546	8-719-977-07	DIODE DTZ6.2B	
D547	8-719-977-07	DIODE DTZ6.2B	
D548	8-719-977-07	DIODE DTZ6.2B	
D549	8-719-977-07	DIODE DTZ6.2B	
D550	8-719-977-07	DIODE DTZ6.2B	
D553	8-719-977-07	DIODE DTZ6.2B	
D556	8-719-976-91	DIODE DTZ4.3B	
D557	8-719-976-91	DIODE DTZ4.3B	
D601	8-719-976-91	DIODE DTZ4.3B	
D701	8-719-976-91	DIODE DTZ4.3B	
		< TRANSFORMER >	
FL501	1-404-955-11	TRANSFORMER, IF (IFT COIL)	
		< IC >	
IC501	8-759-153-95	IC uPD-75516GF-248-3B9	
IC502	8-759-246-22	IC TA8172AF	
IC503	8-719-820-91	IC LC7218	
IC504	8-759-932-86	IC BU4081BF	
IC505	8-759-940-45	IC S-8054HN-CB	
IC506	8-759-982-10	IC NJM7809FA	
IC507	8-759-932-64	IC BU4052BF	
IC508	8-759-631-00	IC M5280FP	
IC509	8-759-631-00	IC M5280FP	
IC512	8-759-932-67	IC BU4053B1	
IC514	8-759-820-15	IC LC7537AN	
IC517	8-759-998-24	IC TDA1579T (XTC-102)	
IC518	8-759-909-71	IC BA4558F (XTC-102)	
IC519	8-759-909-71	IC BA4558F	
IC520	8-759-909-71	IC BA4558F	

Ref. No.	Part No.	Description	Remark
IC521	8-759-909-71	IC BA4558F	
IC522	8-759-909-71	IC BA4558F	
IC523	8-759-631-00	IC M5280FP	
IC524	8-759-631-00	IC M5280FP	
IC601	8-759-909-71	IC BA4558F	
IC602	8-759-909-71	IC BA4558F	
IC701	8-759-909-71	IC BA4558F	
IC702	8-759-909-71	IC BA4558F	
		< JUMPER RESISTOR >	
JR1	1-216-296-00	METAL CHIP 0 5% 1/8W	
JR2	1-216-296-00	METAL CHIP 0 5% 1/8W	
JR3	1-216-296-00	METAL CHIP 0 5% 1/8W	
JR4	1-216-296-00	METAL CHIP 0 5% 1/8W	
JR5	1-216-296-00	METAL CHIP 0 5% 1/8W	
JR6	1-216-296-00	METAL CHIP 0 5% 1/8W	
JR7	1-216-296-00	METAL CHIP 0 5% 1/8W	
JR8	1-216-296-00	METAL CHIP 0 5% 1/8W	
JR9	1-216-296-00	METAL CHIP 0 5% 1/8W	
JR10	1-216-296-00	METAL CHIP 0 5% 1/8W	
JR11	1-216-296-00	METAL CHIP 0 5% 1/8W	
JR12	1-216-296-00	METAL CHIP 0 5% 1/8W	
JR13	1-216-296-00	METAL CHIP 0 5% 1/8W	
JR14	1-216-296-00	METAL CHIP 0 5% 1/8W	
JR15	1-216-296-00	METAL CHIP 0 5% 1/8W	
JR16	1-216-296-00	METAL CHIP 0 5% 1/8W	
JR17	1-216-296-00	METAL CHIP 0 5% 1/8W	
JR18	1-216-296-00	METAL CHIP 0 5% 1/8W	
JR19	1-216-296-00	METAL CHIP 0 5% 1/8W	
JR20	1-216-296-00	METAL CHIP 0 5% 1/8W	
JR21	1-216-296-00	METAL CHIP 0 5% 1/8W	
JR22	1-216-295-00	METAL CHIP 0 5% 1/10W	
JR23	1-216-295-00	METAL CHIP 0 5% 1/10W	
JR24	1-216-295-00	METAL CHIP 0 5% 1/10W	
JR25	1-216-295-00	METAL CHIP 0 5% 1/10W	
JR26	1-216-295-00	METAL CHIP 0 5% 1/10W	
JR27	1-216-295-00	METAL CHIP 0 5% 1/10W	
JR28	1-216-296-00	METAL CHIP 0 5% 1/8W	
JR29	1-216-296-00	METAL CHIP 0 5% 1/8W	
JR30	1-216-296-00	METAL CHIP 0 5% 1/8W	
JR31	1-216-296-00	METAL CHIP 0 5% 1/8W	
JR32	1-216-296-00	METAL CHIP 0 5% 1/8W	
JR33	1-216-296-00	METAL CHIP 0 5% 1/8W	
JR34	1-216-296-00	METAL CHIP 0 5% 1/8W	
JR35	1-216-296-00	METAL CHIP 0 5% 1/8W	
JR36	1-216-296-00	METAL CHIP 0 5% 1/8W	
JR37	1-216-296-00	METAL CHIP 0 5% 1/8W	
JR38	1-216-296-00	METAL CHIP 0 5% 1/8W	
JR39	1-216-296-00	METAL CHIP 0 5% 1/8W	

MAIN

Ref. No.	Part No.	Description			Remark
JR40	1-216-296-00	METAL CHIP	0	5%	1/8W
JR41	1-216-295-00	METAL CHIP	0	5%	1/10W
JR42	1-216-295-00	METAL CHIP	0	5%	1/10W
JR43	1-216-295-00	METAL CHIP	0	5%	1/10W
JR44	1-216-295-00	METAL CHIP	0	5%	1/10W
JR45	1-216-295-00	METAL CHIP	0	5%	1/10W
JR46	1-216-295-00	METAL CHIP	0	5%	1/10W
JR47	1-216-295-00	METAL CHIP	0	5%	1/10W
JR48	1-216-295-00	METAL CHIP	0	5%	1/10W
JR49	1-216-295-00	METAL CHIP	0	5%	1/10W
JR50	1-216-295-00	METAL CHIP	0	5%	1/10W
JR51	1-216-295-00	METAL CHIP	0	5%	1/10W
JR52	1-216-295-00	METAL CHIP	0	5%	1/10W
JR53	1-216-295-00	METAL CHIP	0	5%	1/10W
JR54	1-216-295-00	METAL CHIP	0	5%	1/10W
JR505	1-216-296-00	METAL CHIP	0	5%	1/8W
JR506	1-216-295-00	METAL CHIP	0	5%	1/10W
JR508	1-216-295-00	METAL CHIP	0	5%	1/10W

< COIL >

L1	1-459-123-00	COIL, DUST CORE (PAC)	
L501	1-410-381-11	INDUCTOR CHIP	10uH
L502	1-410-389-31	INDUCTOR CHIP	47uH
L503	1-408-798-00	INDUCTOR CHIP	1mH
L504	1-410-381-11	INDUCTOR CHIP	10uH
L505	1-410-198-51	INDUCTOR CHIP	3.3uH
L506	1-410-208-41	INDUCTOR CHIP	22uH
L507	1-410-385-11	INDUCTOR CHIP	22uH
L508	1-410-196-11	INDUCTOR CHIP	2.2uH

< TRANSISTOR >

Q5	8-729-120-28	TRANSISTOR	2SC2412K-R
Q501	8-729-901-00	TRANSISTOR	DTC124EK
Q502	8-729-901-00	TRANSISTOR	DTC124EK
Q503	8-729-120-28	TRANSISTOR	2SC2412K-R
Q504	8-729-120-28	TRANSISTOR	2SC2412K-R
Q505	8-729-120-28	TRANSISTOR	2SC2412K-R
Q506	8-729-106-60	TRANSISTOR	2SB1115A
Q507	8-729-106-60	TRANSISTOR	2SB1115A
Q508	8-729-120-28	TRANSISTOR	2SC2412K-R
Q509	8-729-120-28	TRANSISTOR	2SC2412K-R
Q510	8-729-901-00	TRANSISTOR	DTC124EK
Q511	8-729-216-22	TRANSISTOR	2SA1162
Q512	8-729-901-00	TRANSISTOR	DTC124EK
Q513	8-729-120-28	TRANSISTOR	2SC2412K-R
Q514	8-729-901-01	TRANSISTOR	DTC144EK
Q515	8-729-120-28	TRANSISTOR	2SC2412K-R
Q516	8-729-901-01	TRANSISTOR	DTC144EK
Q517	8-729-106-60	TRANSISTOR	2SB1115A
Q518	8-729-901-00	TRANSISTOR	DTC124EK
Q519	8-729-901-05	TRANSISTOR	DTA124EK
Q520	8-729-901-00	TRANSISTOR	DTC124EK
Q521	8-729-920-21	TRANSISTOR	DTC314TK-H04
Q522	8-729-920-21	TRANSISTOR	DTC314TK-H04
Q523	8-729-920-21	TRANSISTOR	DTC314TK-H04
Q524	8-729-920-21	TRANSISTOR	DTC314TK-H04
Q525	8-729-120-28	TRANSISTOR	2SC2412K-R
Q526	8-729-920-85	TRANSISTOR	2SD1664-QR
Q527	8-729-922-51	TRANSISTOR	2SB1184-F5-R
Q528	8-729-901-00	TRANSISTOR	DTC124EK
Q529	8-729-920-85	TRANSISTOR	2SB1664-QR
Q530	8-729-922-51	TRANSISTOR	2SB1184-F5-R
Q531	8-729-901-00	TRANSISTOR	DTC124EK
Q532	8-729-921-48	TRANSISTOR	2SD1760-F5-Q
Q535	8-729-901-01	TRANSISTOR	DTC144EK
Q536	8-729-901-00	TRANSISTOR	DTC124EK
Q543	8-729-304-13	TRANSISTOR	2SK360D
Q550	8-729-901-05	TRANSISTOR	DTA124EK

< RESISTOR >

R1	1-216-105-00	METAL CHIP	220K	5%	1/10W
R2	1-216-105-00	METAL CHIP	220K	5%	1/10W
R3	1-216-214-00	METAL GLAZE	4.7K	5%	1/8W
R4	1-216-065-00	METAL CHIP	4.7K	5%	1/10W
R5	1-216-065-00	METAL CHIP	4.7K	5%	1/10W
R8	1-216-113-00	METAL CHIP	470K	5%	1/10W
R9	1-216-049-00	METAL CHIP	1K	5%	1/10W
R10	1-216-049-00	METAL CHIP	1K	5%	1/10W
R11	1-216-049-00	METAL CHIP	1K	5%	1/10W
R12	1-216-049-00	METAL CHIP	1K	5%	1/10W
R13	1-216-049-00	METAL CHIP	1K	5%	1/10W
R17	1-216-073-00	METAL CHIP	10K	5%	1/10W
R18	1-216-049-00	METAL CHIP	1K	5%	1/10W
R19	1-216-049-00	METAL CHIP	1K	5%	1/10W
R20	1-216-049-00	METAL CHIP	1K	5%	1/10W
R22	1-216-097-00	METAL GLAZE	100K	5%	1/10W
R23	1-216-089-00	METAL GLAZE	47K	5%	1/10W
R27	1-216-073-00	METAL GLAZE	10K	5%	1/10W
R28	1-216-089-00	METAL GLAZE	47K	5%	1/10W
R29	1-216-041-00	METAL CHIP	470	5%	1/10W
R30	1-216-085-00	METAL GLAZE	33K	5%	1/10W
R33	1-216-202-00	METAL GLAZE	1.5K	5%	1/8W
R34	1-216-073-00	METAL CHIP	10K	5%	1/10W
R40	1-216-049-00	METAL CHIP	1K	5%	1/10W
R134	1-216-073-00	METAL CHIP	10K	5%	1/10W
R419	1-216-057-00	METAL CHIP	2.2K	5%	1/10W

MAIN

Ref. No.	Part No.	Description			Remark
R500	1-216-097-00	METAL CHIP	100K	5%	1/10W
R501	1-216-061-00	METAL CHIP	3.3K	5%	1/10W
R502	1-216-049-00	METAL CHIP	1K	5%	1/10W
R503	1-216-214-00	METAL GLAZE	4.7K	5%	1/8W
R504	1-216-049-00	METAL CHIP	1K	5%	1/10W
R505	1-216-065-00	METAL CHIP	4.7K	5%	1/10W
R506	1-216-037-00	METAL CHIP	330	5%	1/10W
R507	1-216-065-00	METAL CHIP	4.7K	5%	1/10W
R508	1-216-061-00	METAL CHIP	3.3K	5%	1/10W
R509	1-216-061-00	METAL CHIP	3.3K	5%	1/10W
R510	1-216-065-00	METAL CHIP	4.7K	5%	1/10W
R511	1-216-071-00	METAL CHIP	8.2K	5%	1/10W
R512	1-216-075-00	METAL CHIP	12K	5%	1/10W
R513	1-216-069-00	METAL CHIP	6.8K	5%	1/10W
R514	1-216-017-00	METAL CHIP	47	5%	1/10W
R515	1-216-105-00	METAL CHIP	220K	5%	1/10W
R516	1-216-079-00	METAL CHIP	18K	5%	1/10W
R517	1-216-073-00	METAL CHIP	10K	5%	1/10W
R518	1-216-073-00	METAL CHIP	10K	5%	1/10W
R519	1-216-224-00	METAL GLAZE	12K	5%	1/8W
R520	1-216-057-00	METAL CHIP	2.2K	5%	1/10W
R521	1-216-053-00	METAL CHIP	1.5K	5%	1/10W
R522	1-216-046-00	METAL CHIP	750	5%	1/10W
R523	1-216-081-00	METAL GLAZE	22K	5%	1/10W
R524	1-216-055-00	METAL GLAZE	1.8K	5%	1/10W
R525	1-216-061-00	METAL CHIP	3.3K	5%	1/10W
R526	1-216-073-00	METAL CHIP	10K	5%	1/10W
R527	1-216-059-00	METAL CHIP	2.7K	5%	1/10W
R528	1-216-059-00	METAL CHIP	2.7K	5%	1/10W
R529	1-216-061-00	METAL CHIP	3.3K	5%	1/10W
R530	1-216-065-00	METAL CHIP	4.7K	5%	1/10W
R531	1-216-063-00	METAL CHIP	3.9K	5%	1/10W
R532	1-216-198-00	METAL CHIP	1K	5%	1/8W
R533	1-216-049-00	METAL CHIP	1K	5%	1/10W
R534	1-216-246-00	METAL CHIP	100K	5%	1/10W
R535	1-216-083-00	METAL CHIP (US, Canadian)	27K	5%	1/10W
R535	1-216-091-00	METAL GLAZE (GERMANY)	56K	5%	1/10W
R535	1-216-748-11	METAL GLAZE	39K	5%	1/10W(AEP, E)
R536	1-216-073-00	METAL CHIP	10K	5%	1/10W
R537	1-216-073-00	METAL CHIP	10K	5%	1/10W
R538	1-216-166-00	METAL GLAZE	47	5%	1/8W
R539	1-216-073-00	METAL CHIP	10K	5%	1/10W
R540	1-216-073-00	METAL CHIP	10K	5%	1/10W
R541	1-216-073-00	METAL CHIP	10K	5%	1/10W
R542	1-216-105-00	METAL CHIP	220K	5%	1/10W
R543	1-216-081-00	METAL CHIP	22K	5%	1/10W
R544	1-216-071-00	METAL CHIP	8.2K	5%	1/10W
R545	1-216-097-00	METAL CHIP	100K	5%	1/10W
R546	1-216-254-00	METAL GLAZE	220K	5%	1/8W
R547	1-216-055-00	METAL CHIP	1.8K	5%	1/10W
R548	1-216-073-00	METAL CHIP	10K	5%	1/10W
R549	1-216-049-00	METAL CHIP	1K	5%	1/10W
R550	1-216-246-00	METAL GLAZE	100K	5%	1/8W
R551	1-216-105-00	METAL CHIP	220K	5%	1/10W
R552	1-216-081-00	METAL CHIP	22K	5%	1/10W
R553	1-216-105-00	METAL CHIP	220K	5%	1/10W
R554	1-216-073-00	METAL CHIP	10K	5%	1/10W
R555	1-216-057-00	METAL CHIP	2.2K	5%	1/10W
R556	1-216-057-00	METAL CHIP	2.2K	5%	1/10W
R557	1-216-035-00	METAL CHIP	270	5%	1/10W
R558	1-216-073-00	METAL CHIP	10K	5%	1/10W
R559	1-216-222-00	METAL GLAZE	10K	5%	1/8W
R560	1-216-073-00	METAL CHIP	10K	5%	1/10W
R561	1-216-073-00	METAL CHIP	10K	5%	1/10W
R562	1-216-057-00	METAL CHIP	2.2K	5%	1/10W
R563	1-216-057-00	METAL CHIP	2.2K	5%	1/10W
R564	1-216-045-00	METAL CHIP	680	5%	1/10W
R565	1-216-045-00	METAL CHIP	680	5%	1/10W
R566	1-216-073-00	METAL CHIP	10K	5%	1/10W
R567	1-216-057-00	METAL CHIP	2.2K	5%	1/10W
R568	1-216-057-00	METAL CHIP	2.2K	5%	1/10W
R569	1-216-073-00	METAL CHIP	10K	5%	1/10W
R570	1-216-061-00	METAL CHIP	3.3K	5%	1/10W
R571	1-216-051-00	METAL CHIP	1.2K	5%	1/10W
R572	1-216-097-00	METAL CHIP	100K	5%	1/10W
R573	1-216-035-00	METAL CHIP	270	5%	1/10W
R574	1-216-049-00	METAL GLAZE	1K	5%	1/10W
R575	1-216-097-00	METAL CHIP	100K	5%	1/10W
R576	1-216-089-00	METAL GLAZE	47K	5%	1/10W
R577	1-216-049-00	METAL CHIP	1K	5%	1/10W
R578	1-216-073-00	METAL CHIP	10K	5%	1/10W
R579	1-216-049-00	METAL GLAZE	1K	5%	1/10W
R580	1-216-073-00	METAL CHIP	10K	5%	1/10W
R581	1-216-053-00	METAL CHIP	1.5K	5%	1/10W
R582	1-216-053-00	METAL CHIP	1.5K	5%	1/10W
R583	1-216-073-00	METAL CHIP	10K	5%	1/10W
R584	1-216-053-00	METAL CHIP	1.5K	5%	1/10W
R585	1-216-053-00	METAL CHIP	1.5K	5%	1/10W
R586	1-216-105-00	METAL CHIP	220	5%	1/10W
R587	1-216-053-00	METAL CHIP	1.5K	5%	1/10W
R588	1-216-053-00	METAL CHIP	1.5K	5%	1/10W
R589	1-216-184-00	METAL GLAZE	270	5%	1/8W
R590	1-216-065-00	METAL CHIP	4.7K	5%	1/10W
R591	1-216-105-00	METAL CHIP	220K	5%	1/10W
R592	1-216-246-00	METAL GLAZE	100K	5%	1/8W
R593	1-216-041-00	METAL CHIP	470	5%	1/10W

MAIN

Ref. No.	Part No.	Description			Remark
R594	1-216-057-00	METAL CHIP	2.2K	5%	1/10W
R595	1-216-097-00	METAL CHIP	100K	5%	1/10W
R596	1-216-053-00	METAL CHIP	1.5K	5%	1/10W
R597	1-216-073-00	METAL CHIP	10K	5%	1/10W
R598	1-216-073-00	METAL CHIP	10K	5%	1/10W
R602	1-216-121-00	METAL CHIP	1M	5%	1/10W
R603	1-216-073-00	METAL CHIP	10K	5%	1/10W
R604	1-216-065-00	METAL CHIP	4.7K	5%	1/10W(AEP, E)
R604	1-216-075-00	METAL CHIP (GERMANY)	12K	5%	1/10W
R604	1-216-295-00	METAL CHIP (US, Canadian)	0	5%	1/10W
R605	1-216-057-00	METAL GLAZE	2.2K	5%	1/10W
R606	1-216-081-00	METAL CHIP	22K	5%	1/10W
R607	1-216-025-00	METAL CHIP	100	5%	1/10W
R611	1-216-061-00	METAL CHIP	3.3K	5%	1/10W
R612	1-216-077-00	METAL CHIP	15K	5%	1/10W
R613	1-216-121-00	METAL CHIP	1M	5%	1/10W
R614	1-216-121-00	METAL CHIP	1M	5%	1/10W
R620	1-216-073-00	METAL CHIP	10K	5%	1/10W
R621	1-216-073-00	METAL CHIP	10K	5%	1/10W
R622	1-216-121-00	METAL CHIP	1M	5%	1/10W
R630	1-216-041-00	METAL CHIP	470	5%	1/10W
R631	1-216-085-00	METAL CHIP	33K	5%	1/10W
R632	1-216-073-00	METAL CHIP	10K	5%	1/10W
R633	1-216-085-00	METAL CHIP	33K	5%	1/10W
R634	1-216-073-00	METAL CHIP	10K	5%	1/10W
R636	1-216-073-00	METAL CHIP	10K	5%	1/10W
R637	1-216-057-00	METAL CHIP	2.2K	5%	1/10W
R638	1-216-121-00	METAL CHIP	1M	5%	1/10W
R639	1-216-121-00	METAL CHIP	1M	5%	1/10W
R640	1-216-073-00	METAL CHIP	10K	5%	1/10W
R641	1-216-057-00	METAL CHIP	2.2K	5%	1/10W
R702	1-216-121-00	METAL CHIP	1M	5%	1/10W
R703	1-216-073-00	METAL CHIP	10K	5%	1/10W
R704	1-216-065-00	METAL CHIP	4.7K	5%	1/10W(AEP, E)
R704	1-216-075-00	METAL CHIP (GERMANY)	12K	5%	1/10W
R704	1-216-295-00	METAL CHIP (US, Canadian)	0	5%	1/10
R705	1-216-057-00	METAL CHIP	2.2K	5%	1/10W
R706	1-216-081-00	METAL CHIP	22K	5%	1/10W
R707	1-216-025-00	METAL CHIP	100	5%	1/10W
R711	1-216-061-00	METAL CHIP	3.3K	5%	1/10W
R712	1-216-226-00	METAL GLAZE	15K	5%	1/8W
R713	1-216-073-00	METAL CHIP	10K	5%	1/10W
R714	1-216-121-00	METAL CHIP	1M	5%	1/10W
R720	1-216-073-00	METAL CHIP	10K	5%	1/10W

Ref. No.	Part No.	Description			Remark
R721	1-216-073-00	METAL CHIP	10K	5%	1/10W
R722	1-216-121-00	METAL CHIP	1M	5%	1/10W
R730	1-216-041-00	METAL CHIP	470	5%	1/10W
R731	1-216-085-00	METAL CHIP	33K	5%	1/10W
R732	1-216-073-00	METAL CHIP	10K	5%	1/10W
R733	1-216-085-00	METAL CHIP	33K	5%	1/10W
R734	1-216-073-00	METAL CHIP	10K	5%	1/10W
R736	1-216-073-00	METAL CHIP	10K	5%	1/10W
R737	1-216-057-00	METAL CHIP	2.2K	5%	1/10W
R738	1-216-121-00	METAL CHIP	1M	5%	1/10W
R739	1-216-121-00	METAL CHIP	1M	5%	1/10W
R740	1-216-073-00	METAL CHIP	10K	5%	1/10W
R741	1-216-057-00	METAL CHIP	2.2K	5%	1/10W
R916	1-216-061-00	METAL GLAZE (XTC-120)	3.3K	5%	1/10W
R917	1-216-061-00	METAL CHIP (XTC-120)	33K	5%	1/10W
R922	1-216-121-00	METAL CHIP	1M	5%	1/10W
R930	1-216-067-00	METAL CHIP (XTC-102)	5.6K	5%	1/10W
R931	1-216-067-00	METAL CHIP (XTC-102)	5.6K	5%	1/10W
R932	1-216-116-00	METAL GLAZE (XTC-102)	620K	5%	1/10W
R933	1-216-089-00	METAL CHIP (XTC-102)	47K	5%	1/10W
R934	1-216-071-00	METAL CHIP (XTC-102)	8.2K	5%	1/10W
R936	1-216-093-00	METAL CHIP (XTC-102)	68K	5%	1/10W
R937	1-216-041-00	METAL CHIP (XTC-102)	470	5%	1/10W
R938	1-219-065-00	METAL CHIP (XTC-102)	4.7K	5%	1/10W
R939	1-216-097-00	METAL CHIP (XTC-102)	100K	5%	1/10W
R940	1-216-117-00	METAL CHIP (XTC-102)	680K	5%	1/10W
R941	1-216-106-00	METAL CHIP (XTC-102)	240K	5%	1/10W
R942	1-216-075-00	METAL CHIP (XTC-102)	12K	5%	1/10W
R943	1-216-222-00	METAL GLAZE (XTC-102)	10K	5%	1/8W
R944	1-216-089-00	METAL CHIP (XTC-102)	47K	5%	1/10W
R945	1-216-075-00	METAL CHIP (XTC-102)	12K	5%	1/10W
R946	1-216-105-00	METAL CHIP (XTC-102)	220K	5%	1/10W

Ref. No.	Part No.	Description			Remark
R947	1-216-085-00	METAL CHIP (XTC-102)	33K	5%	1/10W
R948	1-216-089-00	METAL CHIP (XTC-102)	47K	5%	1/10W
R948					
R949	1-216-089-00	METAL CHIP (XTC-102)	47K	5%	1/10W
R949					
R976	1-216-105-00	METAL GLAZE (XTC-102)	220K	5%	1/10W
R976					
R989	1-216-039-00	METAL CHIP	390	5%	1/10W
		< VARIABLE RESISTOR >			
RV501	1-238-601-11	RES, ADJ, CARBON 22K			
RV502	1-238-600-11	RES, ADJ, CARBON 10K			
RV901	1-237-926-00	RES, ADJ, CARBON 100Ω (XTC-102)			
		< SWITCH >			
SW1	1-553-510-00	SWITCH, SLIDE			
SW2	1-533-510-00	SWITCH, SLIDE (10K↔9K) (XTC-100:E, AEP)			
SW4	1-553-510-00	SWITCH, SLIDE (ACC↔NONACC)			
SW5	1-571-532-21	SWITCH, TACTIL (RESET)			
SW6	1-571-754-11	SWITCH, PUSH (1 KEY) (POWER)			
		< TRANSFORMER >			
T901	1-424-036-11	TRANSFORMER, ARI (XTC-102)			
		< THERMISTOR >			
TH501	1-809-148-11	THERMISTOR, POSITIVE			
TH502	1-809-148-11	THERMISTOR, POSITIVE			
		< TUNER >			
TU101	1-465-688-11	TUNER UNIT (AM) (XTC-100/102)			
TU101	1-465-689-11	TUNER UNIT (MW/LW) (XTC-101)			
		< VIBRATOR >			
X501	1-578-779-21	VIBRATOR, CERAMIC			
X502	1-567-848-11	VIBRATOR, CRYSTAL (7.2M)			
X503	1-567-821-11	VIBRATOR, CRYSTAL (4.19M)			

****

*	A-3222-218-A	POWER BOARD, COMPLETE (XTC-100/101)			
		**********			
*	A-3222-343-A	POWER BOARD, COMPLETE (XTC-102)			
		**********			
	1-574-339-11	CORD (WITH CONNECTOR)			
	1-580-860-11	CONNECTOR			
	1-590-477-11	CORD (WITH CONNECTOR)			
	1-590-512-11	CORD (WITH CONNECTOR)			
*	3-366-179-01	HEAT SINK (B)			
	7-685-135-19	SCREW +P 2.6X10 TYPE2 NON-SLIT			
	7-621-770-67	SCREW +PTT 2.6X6 (S)			
		< CAPACITOR >			
C101	1-162-623-11	CERAMIC CHIP	0.1uF	10%	25V
C107	1-163-251-11	CERAMIC CHIP	100PF	5%	50V
C109	1-126-374-61	ELECT	47uF	20%	25V
C110	1-126-374-61	ELECT	47uF	20%	25V
C111	1-126-374-61	ELECT	47uF	20%	25V
C112	1-126-335-11	ELECT	220uF	20%	10V
C113	1-126-335-11	ELECT	220uF	20%	10V
C114	1-136-165-00	FILM	0.1uF	5%	50V
C115	1-136-165-00	FILM	0.1uF	5%	50V
C207	1-163-251-11	CERAMIC CHIP	100PF	5%	50V
C209	1-126-374-61	ELECT	47uF	20%	25V
C210	1-126-374-61	ELECT	47uF	20%	25V
C211	1-126-374-61	ELECT	47uF	20%	25V
C212	1-126-335-11	ELECT	220uF	20%	10V
C213	1-126-335-11	ELECT	220uF	20%	10V
C214	1-136-165-00	FILM	0.1uF	5%	50V
C215	1-136-165-00	FILM	0.1uF	5%	50V
C216	1-128-268-11	ELECT	3300uF	20%	16V
C217	1-162-623-11	CERAMIC CHIP	0.1uF	10%	25V
C307	1-163-251-11	CERAMIC CHIP	100PF	5%	50V
C309	1-126-374-61	ELECT	47uF	20%	25V
C310	1-126-374-61	ELECT	47uF	20%	25V
C311	1-126-374-61	ELECT	47uF	20%	25V
C312	1-126-335-11	ELECT	220uF	20%	10V
C313	1-126-335-11	ELECT	220uF	20%	10V
C314	1-136-165-00	FILM	0.1uF	5%	50V
C315	1-136-165-00	FILM	0.1uF	5%	50V
C407	1-163-251-11	CERAMIC CHIP	100PF	5%	50V
C409	1-126-374-61	ELECT	47uF	20%	25V
C410	1-126-374-61	ELECT	47uF	20%	25V
C411	1-126-374-61	ELECT	47uF	20%	25V
C412	1-126-335-11	ELECT	220uF	20%	10V
C413	1-126-335-11	ELECT	220uF	20%	10V
C414	1-136-165-00	FILM	0.1uF	5%	50V
C415	1-136-165-00	FILM	0.1uF	5%	50V
C416	1-128-268-11	ELECT	3300uF	20%	16V
C417	1-162-623-11	CERAMIC CHIP	0.1uF	10%	25V
		< CONNECTOR >			
CN103	1-506-491-11	CONNECTOR 12P, MALE			
		< DIODE >			
D101	8-719-313-74	DIODE SFPB-52V			
D102	8-719-313-74	DIODE SFPB-52V			

POWER

Ref. No.	Part No.	Description				Remark
D103	8-719-110-59	DIODE	RD22ES-T1B4			
D201	8-719-313-74	DIODE	SFPB-52V			
D202	8-719-313-74	DIODE	SFPB-52V			
D301	8-719-313-74	DIODE	SFPB-52V			
D302	8-719-313-74	DIODE	SFPB-52V			
D401	8-719-313-74	DIODE	SFPB-52V			
D402	8-719-313-74	DIODE	SFPB-52V			
D561	8-719-945-59	DIODE	DSA3A4			
		< IC >				
IC101	8-759-147-25	IC	uPC2500H			
IC201	8-759-147-25	IC	uPC2500H			
IC301	8-759-147-25	IC	uPC2500H			
IC401	8-759-147-25	IC	uPC2500H			
		< RESISTOR >				
R105	1-216-067-00	METAL CHIP		5.6K	5%	1/10W
R106	1-216-067-00	METAL GLAZE		5.6K	5%	1/10W
R111	1-216-009-00	METAL CHIP		22	5%	1/10W
R112	1-216-009-00	METAL CHIP		22	5%	1/10W
R113	1-216-045-00	METAL CHIP		680	5%	1/10W
R114	1-216-049-00	METAL CHIP		1K	5%	1/10W
R115	1-216-049-00	METAL CHIP		1K	5%	1/10W
R116	1-217-806-11	METAL GLAZE		1	5%	1/8W
R117	1-217-806-11	METAL GLAZE		1	5%	1/8W
R205	1-216-067-00	METAL CHIP		5.6K	5%	1/10W
R206	1-216-067-00	METAL GLAZE		5.6K	5%	1/10W
R211	1-216-009-00	METAL CHIP		22	5%	1/10W
R212	1-216-009-00	METAL CHIP		22	5%	1/10W
R213	1-216-045-00	METAL CHIP		680	5%	1/10W
R214	1-216-049-00	METAL CHIP		1K	5%	1/10W
R215	1-216-049-00	METAL CHIP		1K	5%	1/10W
R216	1-217-806-11	METAL GLAZE		1	5%	1/8W
R217	1-217-806-11	METAL GLAZE		1	5%	1/8W
R305	1-216-067-00	METAL CHIP		5.6K	5%	1/10W
R306	1-216-067-00	METAL CHIP		5.6K	5%	1/10W
R311	1-216-009-00	METAL CHIP		22	5%	1/10W
R312	1-216-009-00	METAL CHIP		22	5%	1/10W
R313	1-216-045-00	METAL CHIP		680	5%	1/10W
R314	1-216-049-00	METAL CHIP		1K	5%	1/10W
R315	1-216-049-00	METAL CHIP		1K	5%	1/10W
R316	1-217-806-11	METAL GLAZE		1	5%	1/8W
R317	1-217-806-11	METAL GLAZE		1	5%	1/8W
R405	1-216-067-00	METAL CHIP		5.6K	5%	1/10W
R406	1-216-067-00	METAL CHIP		5.6K	5%	1/10W
R411	1-216-009-00	METAL CHIP		22	5%	1/10W
R412	1-216-009-00	METAL CHIP		22	5%	1/10W
R413	1-216-045-00	METAL CHIP		680	5%	1/10W
R414	1-216-049-00	METAL CHIP		1K	5%	1/10W
R415	1-216-049-00	METAL CHIP		1K	5%	1/10W
R416	1-217-806-11	METAL GLAZE		1	5%	1/8W
R417	1-217-806-11	METAL GLAZE		1	5%	1/8W

****

9-956-346-81

Sony Corporation
Mobile Electronics Group

English
92F0576-1
Printed in Japan
© 1992. 6

Published by Customer Relations and Service Group

XTC-100/101/102

SONY
SERVICE MANUAL

US Model
Canadian Model
E Model
XTC-100
AEP Model
XTC-100/101
Germany Model
XTC-102

CORRECTION-1

Please correct your service manual.

: Corrected portion

- **Block Diagram (Page 17 – 18)**

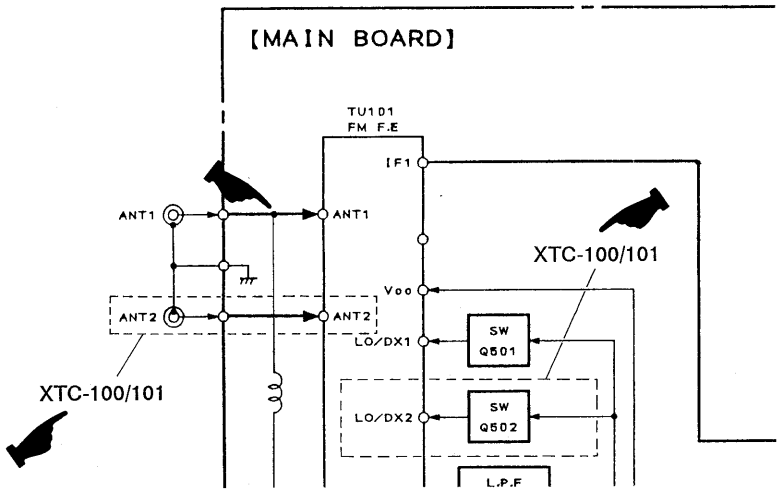

- **Schematic Diagram (Page 22)**
  Location: B – 9, 10

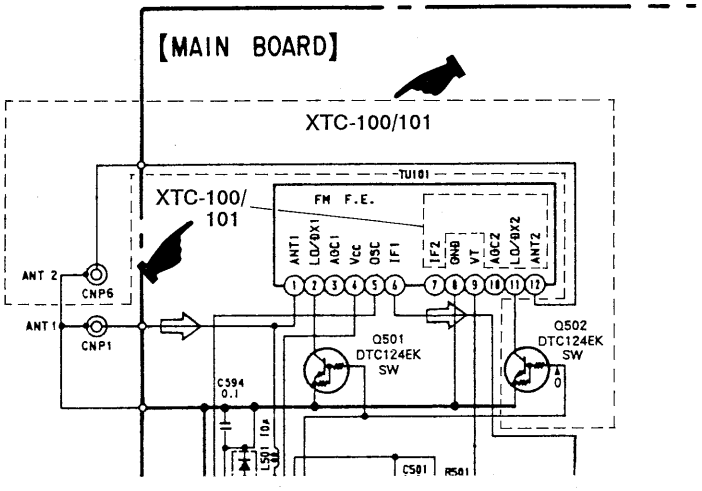

9-956-346-91

Sony Corporation
Mobile Electronics Group

English
91K0579-1
Printed in Japan

© 1991. 11

Published by Customer Relations and Service Group

XTC-100/101/102

SONY
SERVICE MANUAL

US Model
Canadian Model
E Model
XTC-100

AEP Model
XTC-100/101

Germany Model
XTC-102

CORRECTION-2

Correct your service manual as shown below.

____ : **indicates corrected portion.**

Page	INCORRECT			CORRECT	
	No.	Part No.	Description	Part No.	Description
40	S800	1-572-655-11	SWITCH KEYBOARD (OFF)	1-572-768-11	SWITCH KEYBOARD (OFF)
	S801	1-572-655-11	SWITCH KEYBOARD (FM/AM) (XTC-100/102)	1-572-768-11	SWITCH KEYBOARD (FM/AM) (XTC-100/102)
	S801	1-572-655-11	SWITCH KEYBOARD (FM/MW/LW) (XTC-101)	1-572-768-11	SWITCH KEYBOARD (FM/MW/LW) (XTC-101)
	S802	1-572-655-11	SWITCH KEYBOARD (WALKMAN)	1-572-768-11	SWITCH KEYBOARD (WALKMAN)
	S803	1-572-655-11	SWITCH KEYBOARD (CD)	1-572-768-11	SWITCH KEYBOARD (CD)
	S804	1-572-655-11	SWITCH KEYBOARD (3)	1-572-768-11	SWITCH KEYBOARD (3)
	S805	1-572-655-11	SWITCH KEYBOARD (6/ATA)	1-572-768-11	SWITCH KEYBOARD (6/ATA)
	S806	1-572-655-11	SWITCH KEYBOARD (AMS +)	1-572-768-11	SWITCH KEYBOARD (AMS +)
	S807	1-572-655-11	SWITCH KEYBOARD (DISC +)	1-572-768-11	SWITCH KEYBOARD (DISC +)
	S808	1-572-655-11	SWITCH KEYBOARD (2/REPEAT)	1-572-768-11	SWITCH KEYBOARD (2/REPEAT)
	S809	1-572-655-11	SWITCH KEYBOARD (5/SHUF)	1-572-768-11	SWITCH KEYBOARD (5/SHUF)
	S810	1-572-655-11	SWITCH KEYBOARD (AMS −)	1-572-768-11	SWITCH KEYBOARD (AMS −)
	S811	1-572-655-11	SWITCH KEYBOARD (DISC −)	1-572-768-11	SWITCH KEYBOARD (DISC −)
	S812	1-572-655-11	SWITCH KEYBOARD (1/INTRO)	1-572-768-11	SWITCH KEYBOARD (1/INTRO)
	S813	1-572-655-11	SWITCH KEYBOARD (4/D. SCAN)	1-572-768-11	SWITCH KEYBOARD (4/D. SCAN)
	S814	1-572-655-11	SWITCH KEYBOARD (M. SCAN)	1-572-768-11	SWITCH KEYBOARD (M. SCAN)
	S815	1-572-655-11	SWITCH KEYBOARD (SENS)	1-572-768-11	SWITCH KEYBOARD (SENS)
	S816	1-572-655-11	SWITCH KEYBOARD (SELECT +)	1-572-768-11	SWITCH KEYBOARD (SELECT +)
	S817	1-572-655-11	SWITCH KEYBOARD (SELECT)	1-572-768-11	SWITCH KEYBOARD (SELECT)
	S818	1-572-655-11	SWITCH KEYBOARD (SELECT −)	1-572-768-11	SWITCH KEYBOARD (SELECT −)
	S819	1-572-655-11	SWITCH KEYBOARD (MUTE)	1-572-768-11	SWITCH KEYBOARD (MUTE)
	S820	1-572-655-11	SWITCH KEYBOARD (DSPL)	1-572-768-11	SWITCH KEYBOARD (DSPL)
	S821	1-572-655-11	SWITCH KEYBOARD (ILL)	1-572-768-11	SWITCH KEYBOARD (ILL)
	S822	1-572-655-11	SWITCH KEYBOARD (LOUD)	1-572-768-11	SWITCH KEYBOARD (LOUD)

9-956-346-92

Sony Corporation
Mobile Electronics Group

English
92J0579-1
Printed in Japan
© 1992.10
Published by Audio Corporate Planning Group

XTC-100/101/102

SONY
SERVICE MANUAL

US Model
Canadian Model
E Model
XTC-100

AEP Model
XTC-100/101

Germany Model
XTC-102

CORRECTION-3

Correct your service manual as shown below.

☛ : **indicates corrected portion.**

Page	INCORRECT			CORRECT	
	No.	Part No.	Description	Part No.	Description
38	73	1-580-806-11	CONNECTOR 10P	1-580-807-11 ☛	CONNECTOR, SOCKET 10P (CN901)
39		1-580-807-11	CONNECTOR (FEMALE) 10P	1-580-806-11 ☛	CONNECTOR, PLUG 10P (CNJ801)
40		1-580-806-11	CONNECTOR 10P	1-580-807-11 ☛	CONNECTOR, SOCKET 10P (CN901)

English
93G0577-1D
Printed in Japan
© 1993. 7

9-956-346-93

Sony Corporation
Mobile Electronics Group

Published by Audio Sector Quality Assurance Dept.